Training Course Manual

On

Vibration Analysis

Level – 1

March 25-28, 2019

Organized by

Centre for Vibration Analysis & Condition Monitoring (CVCM)

Directorate of Nuclear Power Engineering Reactor (DNPER)

PAKISTAN ATOMIC ENERGY COMMISSION

Table of Contents

CHAPTER 1 MAINTENANCE PHILOSOPHIES

1.1 A COMPARISON OF MAINTENANCE PHILOSOPHIES

In general, there are three ways to maintain machinery:

1. Breakdown maintenance
2. Scheduled or "preventive" maintenance
3. Predictive maintenance
4. Proactive maintenance

1.1.1 Breakdown Maintenance

Breakdown maintenance is essentially no maintenance at all. The machine is simply allowed to run until complete failure, inefficiency or product spoilage forces a shutdown.

Although many machines are maintained this way, breakdown maintenance has several disadvantages. First, failures can be most untimely and, there is little one can do beforehand to anticipate the tools, personnel and replacement parts that will be needed to return the machine to service. Secondly, machines allowed to run to failure generally require more extensive repair than would have been necessary if the problem had been detected and corrected early. Some failures can be catastrophic, requiring total replacement of the machine. It is estimated that, on the average, it costs approximately three times more to repair or replace a machine that has been allowed to run to total failure compared to the cost to repair a machine before failure. Catastrophic machine failure can also pose a safety problem for plant personnel. And, the added cost of lost production while the machine is out of service can be staggering.

1.1.2 Scheduled or Preventive Maintenance

Compared to breakdown maintenance, a program of periodic disassembly, inspection and replacement of worn parts has the distinct advantage of lessening the frequency of breakdown repairs and also, permits scheduled shutdown. Under this program, each critical machine is shut down after a specified period of operation and partially or completely dismantled for a thorough inspection and replacement of worn parts, if any. This approach to machinery maintenance, too, has disadvantages. First, to periodically dismantle every critical piece of equipment in the plant can be expensive and time consuming. Second, the interval between periodic inspections is difficult to predict. If the program is so successful that no machinery, failures occur, it may be that the interval is too short and money and production is being wasted. If the interval is too long, costly failures may still occur.

1.1.3 Predictive Maintenance

Predictive maintenance involves the trending and analysis of machinery performance parameters to detect and identify developing problems before failure and extensive damage can occur. On-line detection and diagnosis of problems is obviously the most desirable way to maintain machinery. If problems can be detected early, when defects are minor and do not affect performance, and if the nature of the problem can be identified while the machine runs:

1. Shut down for repairs can be scheduled for a convenient time.
2. A work schedule, together with the requirements for personnel, tools and replacement parts can be prepared before the shutdown.
3. Extensive damage to the machine resulting from forced failure can be avoided.

4. Repair time can be kept to a minimum, resulting in reduced machinery downtime.
5. Costly trial-and-error approaches to solve a problem can be avoided since analysis identifies the nature of the problem.
6. Machines in good operating condition can continue to run as long as no problems develop. Time and money are not wasted dismantling machines that are already operating properly.

1.1.3.1 VIBRATION AS A PREDICTIVE MAINTENANCE TOOL

There are many machinery parameters that can be measured and trended to detect the onset of problems. Some of these include:

1. Machinery vibration
2. Lube oil analysis including wear particle analysis
3. Ultrasonic (thickness) testing
4. Motor current analysis
5. Infrared thermography
6. Bearing temperature

In addition, machinery performance characteristics such as flow rates and pressures can also be monitored to detect problems. In the case of machine tools, the inability to produce a quality product in terms of surface finish or dimensional tolerances is usually an indication of problems. All of these techniques have value and merit. However the one characteristic that is common to all machines is vibration.

1.1.4 Proactive maintenance

Proactive maintenance is a general term that includes a number of strategies and studies such as "Precision Maintenance", "Reliability Based Maintenance", and “Reliability Centered Maintenance” and “Root cause failure analysis”. To be proactive is:

“To anticipate and solve problems before they become problems”

A predictive maintenance program gives a warning of bearing failure, for example, and then the replacement can be ordered and a repair scheduled. That's great, but why did the bearing fail? Knowing that answer and taking the required action to remove the cause, should enable the machine to last longer when it returns to service.
The term "proactive" is used because, rather than just waiting for the machine to fail, we take action ahead of time to reduce the chance of it failing. Now, that does not mean replacing bearings and seals as may be the case in preventive maintenance; instead we find the root cause of the failure and correct the problem. In order to do this, we must ask the question: “Why do machines fail?”

1.2 ADDITIONAL APPLICATIONS FOR VIBRATION DETECTION AND ANALYSIS

Although this text emphasizes the use of vibration control for predictive maintenance, there are many additional applications which include:

1.1.1 Incoming Inspection:

Many companies perform vibration and balance checks on newly purchased or rebuilt machines and machine components. Inspection of the items such as, gear boxes, motors,

couplings, pump and fan motors, etc. carry out to insure that they meet quality standards. One company recently reported setting up a test facility to check the quality of new replacement bearings. Another company tests new as well as rebuilt machine tool spindles to make sure they perform properly before installation. These companies have learned through experience that detecting faulty components before they are installed is easier and considerably less costly than tracing the problem after installation and startup.

1.1.2 Machinery Acceptance Standards

Over the past three decades, many industries as well as manufacturing/engineering industries, standards organizations and government agencies have established vibration acceptance levels for newly installed machinery. These are as follows:

- American Petroleum Institute (API)
- International Standards Organization (ISO)
- U.S Veterans Administration (VA)
- National Electrical Manufacturers Association (NEMA)
- National Gear Manufacturers Association (AGMA)
- Hydraulics Institute (Pumps)

By including maximum acceptable levels of vibration in machinery purchase, repair and installation specifications, one must be assured that a piece of equipment will be in good operating condition an meet anticipated performance and reliability expectations.

1.1.3 Quality Control

Many manufacturers use vibration detection and analysis techniques in various ways to minimize waste and to insure the quality of their products. For example, a major manufacturer of automobile engines was experiencing high rejection rates on machined engine blocks due to poor cylinder bore finish. A vibration monitor was installed on the 16-spindle boring mill. Whenever a significant increase in vibration occurred, the vibration monitor shut down the boring mill and also identified the defective spindle for immediate correction. This technique not only improved the quality of cylinder bore finish, but significantly reduced downtime and product waste.

Detecting, pinpointing and correcting excessive vibration in machine tools improves product quality and also increases tool life. Balancing of grinding wheels in-place following replacement or truing saves time and assures continued productivity and product quality.

Of course, vibration detection and analysis techniques apply directly to the products being manufactured as well as the machinery used in their production. Vibration testing of assembled machines and components leads directly to improved product quality.
Dynamic balancing of rotating assemblies is an important element in the correction phase of a complete predictive maintenance program. However, the same procedures and instrumentation can be used in the production of new or rebuilt machinery. Without question, most reputable manufacturers of rotating and reciprocating machinery include dynamic balancing as a normal part of the manufacturing process.

Engineering**:** Vibration detection and analysis play important roles in the development and testing of new or prototype machines. Vibration measurements proved overall performance data. Analysis techniques reveal troubles that might be the result of improper installation and adjustment as well as improper design.

Field Service**:** In spite of the many engineering tests and quality control inspections, vibration problems do occur once a machine is delivered, installed and brought into service. Such problems may include:

- Damage to the machine during transportation or installation
- Improper alignment of couplings or pulleys
- Weak or inadequate base or foundation
- Resonance of the machine or a machine component
- Distortion due to "soft foot" or piping strain
- Machine operating outside designed performance parameters
- Improper design of related components such as piping, duct work etc.

Due to multitude of problems that can result in vibratory forces, a complete vibration analysis of the complete installation is often the only way to clearly define the source of a problem and the corrective action required for its solution.

CHAPTER 2 CONDITION MONITORING

Condition Monitoring is the art of monitoring plant equipment to determine its health or condition at a point in time.

Often the terms "condition monitoring" and "predictive maintenance" are used interchangeably. In reality, they do not mean the same thing. "Condition monitoring" is the act of determining the condition of a machine. Predictive maintenance involves taking action based on the condition.

"Monitor the condition of machine.
If you know the condition you can plan your response"

Condition monitoring ≠ predictive maintenance

2.1 Vibration analysis

All rotating machinery like fans pumps, motors, turbines and compressors will vibrate. The level of the vibration and the pattern of the vibration indicate the condition of internal rotating components.

If we use electronic instruments to measure the vibration, those levels can be monitored and the pattern studied. To a large extent, if the levels increase, and the patterns change we can not only detect that there is a problem, but we can diagnose the type of problem.

A number of different types of problems can be detected with vibration analysis. The vibration pattern can indicate a misalignment condition or an unbalance condition. The pattern can point to a rolling element bearing problem or a journal bearing problem.

Fault conditions detectable with vibration analysis include:

- Bearing problems – both journal and rolling element bearings
- Unbalance
- Misalignment
- Looseness
- Soft foot
- Electrical faults
- Eccentric rotors
- Belt and coupling problems
- Gear mesh
- Broken rotor bars

Vibration analysis utilizes a special sensor mounted to a bearing housing that is sensitive to movement. A "snapshot" of the vibration is captured in a portable data collector and transferred to a computer for analysis. The snapshot data is generally collected on a monthly basis except for critical machinery which may have permanent sensors mounted for continuous monitoring.

2.1.1 Online monitoring

For a machine that is critical to the process, and machines located in remote or hazardous environment (such that routine measurements cannot be taken), sensors will be mounted permanently on the machine, and a monitoring system will monitor the vibration levels to give an early warning of a fault condition.

2.2 Acoustic Emission (Ultrasound)

Rotating equipment and other plant assets emit high frequency sounds that provide clues to potential problems. Ultrasound testing is a useful technology for a variety of applications.

Finding air leaks	Excellent
Finding steam leaks in steam traps	Excellent
Detecting lubrication problems	Good
Adding the correct amount of lubricant	Good
Detecting electrical faults (arcs, coronas)	Good
Finding flow related problems in pipes and valves	Very limited success

How it works:
The human ear can only detect sound in the sonic frequency range of 20 Hz to 20,000 Hz. Sounds above this range are referred to as "Ultrasonic", meaning above human hearing capability.

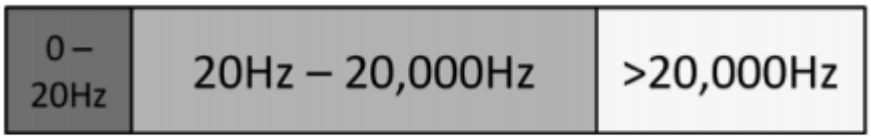

The ultrasound sensor is used to measure the signal and heterodyne (demodulate) it to a frequency range within the human hearing range.

2.3 Infrared thermography

Infrared Thermography is the study of radiated energy using a thermal infrared imaging system.

Thermography is a popular technology applied to rotating and non-moving equipment in the plant. It involves the study of temperature as increased wear, steam leaks, and electrical arcing (to name but a few conditions) result in a change in temperature.

Excessive heat is an indicator of problems or potential problems in plant equipment including moving and stationary parts and equipment such as electrical panels, boilers, transformers, and electrical power transmission conductors, insulators and switchgear. Infrared Thermography is an ideal, non-intrusive technology for detecting these problems.

The technology uses sensors that are sensitive to the radiated electromagnetic energy associated with heat. The device translates the detected level of radiated energy into a temperature based on information entered by the user. Two types of devices are commonly used in our industry: spot radiometers and infrared cameras.

Infrared Thermography is typically used in the following applications:

- Mechanical

- Machines, pipes, bearings, belts
- Electrical
- Overhead lines, transformers motors, control panels
- Steam Systems
- Piping, steam traps
- Refractory plant

2.4 Oil analysis

Oil is the life-blood of rotating equipment. Rotating machinery needs correct lubrication. But it is surprising how often the incorrect lubricant is used, or the lubricant is contaminated. The result is increased wear and equipment failure. There is also an economic issue - the lubricant is expensive, both to purchase and dispose of.

Too often perfectly good lubricant is changed out, at great expense. So testing is performed on the oil and grease. The tests indicate:

- Whether the lubricant is still able to perform its job (is the additive pack OK, etc.)
- whether there are any contaminants such as water or dirt
- whether there are any metals or other elements, which may give an early warning of wear

Oil analysis tests and what they measure

Samples are collected routinely for analysis. They may be sent to an outside lab or an in-house lab. Various tests on the oil include:

Test	Measures…
Oil Bath 40c and 100c	Viscosity
R. D. E. Spectroscopy	Elemental Concentrations
FT – IR (Infrared)	Degradation, contamination, additive depletion
Total Acid	Acid Levels
Total Base	Base Levels
Water Crackle Karl Fisher	 Concentrations to 200ppm Concentrations to 10ppm
Particle Count	NAS & ISO Cleanliness

Strength of oil analysis:

- Detects normal wear particles up to 6-10 microns.
- Determines lubricant additive depletion
- Detects fluid contamination

Weakness of oil analysis

- Does not detect the onset of abnormal wear – wear particles in excess of 10 microns

- Does not detect the sources of wear (bearings, gears, seals, rings, etc)
- Does not provide information regarding machine condition.

2.5 Wear particle analysis

Ferrographic wear particle analysis is a machine condition analysis technology that is applied to lubricated equipment. It provides an accurate insight into the condition of a machine's lubricated components by examining particles suspended in the lubricant.

By trending the size, concentration, shape, and composition of particles contained in systematically collected oil samples, abnormal wear-related conditions can be identified at an early stage.

Wear particle analysis complements vibration analysis by providing, in some cases, earlier fault detection and is less susceptible to the limitations imposed by slowly rotating or reciprocating machinery.

Wear metals

The following table is a useful tool in finding possible sources of wear particles.

Wear Metal	Possible Origin
Aluminum	Bearings, Blocks, Blowers, Bushings, Clutches, Pistons, Pumps, Rotors, Washers
Chromium	Bearings, Pumps, Rings, Rods
Copper	Bearings, Bushings, Clutches, Pistons, Pumps, Washers
Iron	Bearings, Blocks, Crankshafts, Cylinders, Discs, Gears, Pistons, Pumps, Shafts
Lead	Bearings
Nickel	Bearings, Shafts, Valves
Silver	Bearings, Bushings, Solder
Tin	Bearings, Bushings, Pistons

Wear particle analysis is a powerful tool for non-intrusive examination of the oil-wetted parts of a machine. It can detect particles from 1 micron to 350 microns. The analysis considers the particle shape, composition, size distribution, and concentration. The results aid in determining operating wear modes within the machine, resulting in specific maintenance recommendations. Wear Particle Analysis detects abnormal wear. The standard oil analysis detects normal wear particles up to 6 microns.

2.6 Motor testing

Electric Motors are the main equipment component in most plants. It is imperative to know their condition in order to ensure uninterrupted processes and to schedule downtimes rather than have surprise downtimes.

Mechanical problems of motors can be detected with Ultrasonics, Infrared Thermography, and Vibration monitoring. However, there are special tests that can detect the electrical condition. The tests fall into two categories:

1) **Static / off-line tests**
2) **Dynamic on-line tests**

Static/ off-line tests

Static or off-line testing is usually performed once a year or during outages with the motor shut down. Off-line testing is also used as a quality assurance tool when first receiving reconditioned or rewound motors from the motor shop before they are stored or returned to service. Testing these incoming motors provides proof the motor shop is doing its job properly and becomes the new base-line for future trending. Off-line equipment can also be used as a troubleshooting tool. Any time a problem has occurred the motor involved should be tested for insulation integrity. Overload situations, contamination issues and voltage problems can compromise the insulation.

Off-line testing includes:

- winding resistance
- meg-ohm
- polarization index
- high potential
- Surge testing

Motor Circuit Analysis - MCA Traditional Test Methods: - Most of the traditional test methods require a significant voltage application in order to work. The purpose is to stress the insulation system by forcing a reaction of the insulation dipoles or to force a potential across a resistive or capacitive fault.

Dynamic On-line Tests

On-line tests enable testing at the motor and at the panel while the motor is in service. The tests view the current and voltage spectra depending on the test. The data is treated like vibration data.

Online Tests that can be performed include:

- Winding shorts between conductors or coils
- Winding contamination
- Insulation to ground faults
- Air gap faults, including eccentric rotors
- Rotor faults including casting voids and broken rotor bars.
- Vibration which detects broken rotor bars, air gap eccentricity, eccentric rotor
- Current Analysis with a current clamp – broken rotor bars
- Flux Coil – uneven flux field.

CHAPTER 3 PRINCIPLES OF VIBRATION

3.1 CHARACTERISTICS OF VIBRATION

The characteristics needed to define the vibration include:

- Frequency
- Displacement
- Velocity
- Acceleration
- Phase

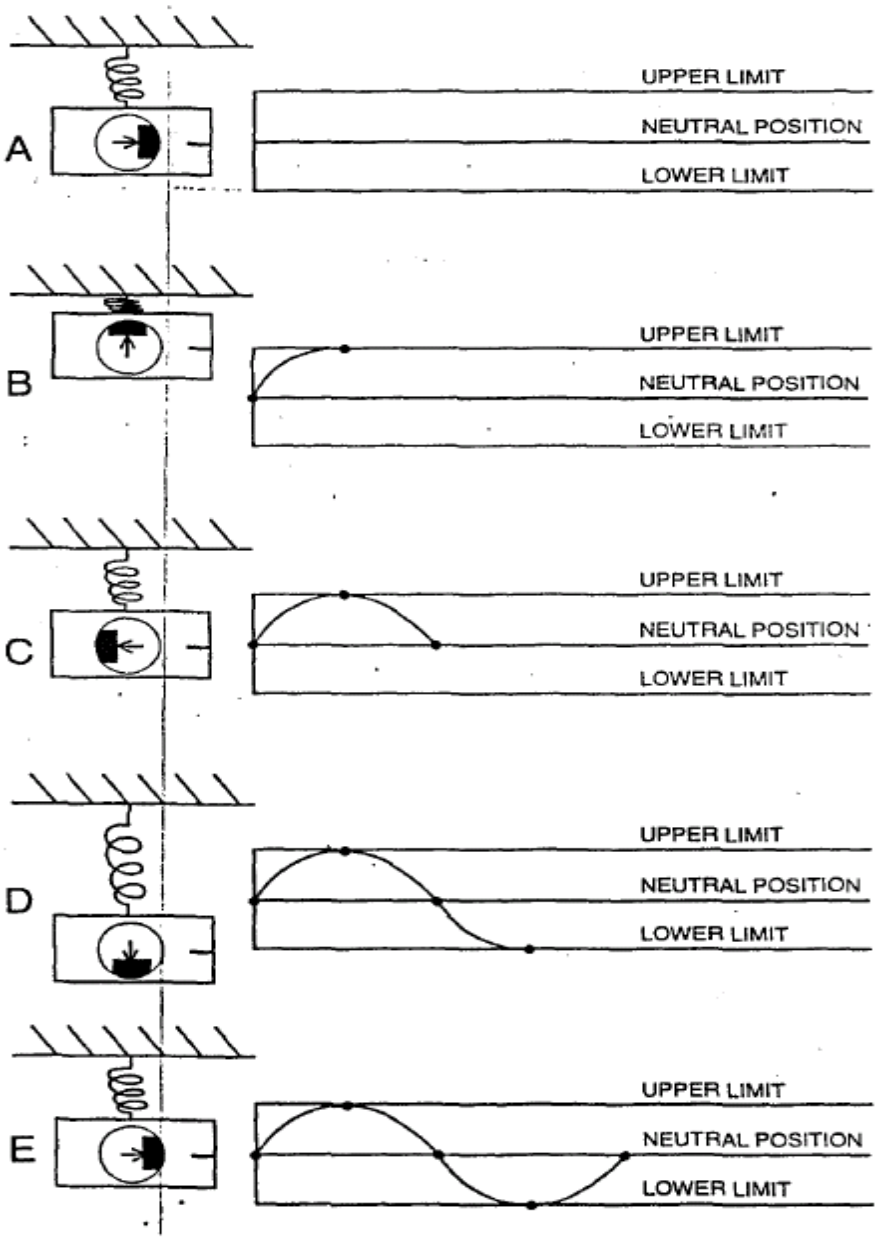

Figure 3 -1: Vibration of a simple spring mass system plotted as a function of time

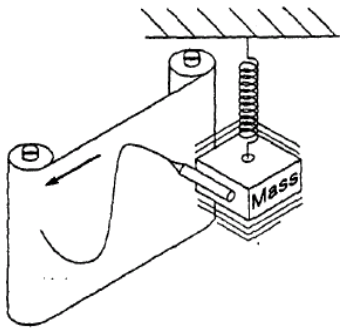

Figure 3-2: Pen added to mass to trace its oscillating motion (time waveform) on a strip chart recorder.

3.2 VIBRATION FREQUENCY

As shown in Figure 3-3, the amount of time required to complete one full cycle of the vibration is called the period of the vibration. If, for example, the machine completes one full cycle of vibration in 1/60th of a second, the period of vibration is said to be 1/60th of a second.

Although the period of the vibration is a simple and meaningful characteristic, a characteristic of equal simplicity but more meaningful is the **vibration frequency**.

Vibration frequency is simply a measure of the number of complete cycles that occur in a specified period of time such as "cycles-per-second" (CPS) or "cycles per-minute" (CPM). Frequency is related to the period of vibration by this simple formula:

Frequency = 1 / Period

In other words, the frequency of a vibration is simply the "inverse" of the period of the vibration. Thus, if the period of time required to complete one cycle is 1/ 60th of a second, then the frequency of the vibration would be 60 cycles-per second or 60 CPS.

In the real world of vibration detection and analysis, it is not necessary to determine the frequency of vibration by observing the vibration time waveform, noting the period of the vibration and then taking and calculating the inverse of the period to find the frequency although this can be done. Nearly all modern-day data collector instruments and vibration analyzers provide a direct readout of the vibration frequencies being generated by the machine.

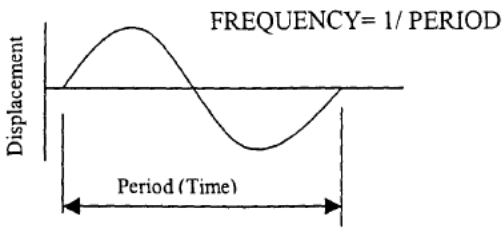

Figure 3 -3: The period of vibration is the time required to complete one full cycle

Although vibration frequency may be expressed in cycles-per-second or CPS, the common practice is to use the term Hertz (abbreviated Hz) in lieu of CPS. This is in honor of Heinrich Rudolf Hertz, a 19th century German physicist who is credited with discovering electromagnetic radiation. Thus, a vibration with a frequency of 60 CPS would actually be expressed as **60 Hz.**

Although vibration frequency can be measured and expressed in Hertz (Hz), for most machinery vibration work, vibration frequency is measured in **cycles per minute,** abbreviated **CPM.** Expressing vibration frequency in terms of CPM makes it much easier to relate this characteristic to the rotational speed of the machine, which is normally expressed in

revolutions-per-minute or RPM. Thus, if a machine operates at 3600 RPM, it is much more meaningful to know that a vibration occurs at 3600 CPM (1 x RPM) than 60 Hz.

Of course CPM and Hz can be easily converted to one another as follows:

Given a frequency expressed in Hz, you can convert it to CPM:

CPM = Hertz x 60 Seconds/Minute

Given a frequency expressed in CPM, you can convert it to Hz:

Hertz = CPM/60 Seconds/Minute

3.3 SIGNIFICANCE OF VIBRATION FREQUENCY

There are literally hundreds of specific mechanical and operational problems that can cause a machine to exhibit excessive vibration. Obviously, when a vibration problem exists, a detailed analysis of the vibration should be performed to identify or pinpoint the specific cause. This is where knowing the frequency of vibration is most important. **Vibration frequency** is an analysis or diagnostic tool.

The forces that cause vibration are usually generated through the rotating motion of the machine's parts. Because these forces change in direction or amplitude according to the rotational speed (RPM) of the machine components, it follows that most vibration problems will have frequencies that are directly related to the rotational speeds.

To illustrate the importance of vibration frequency, assume that a machine, consisting of a fan operating at 2400 RPM and belt driven by a motor operating at 3600 RPM, is vibrating excessively at a measured frequency of 2400 CPM (1 x fan RPM), this clearly indicates that the fan is the source of the vibration and not the motor or belts. Knowing this simple fact has eliminated literally hundreds of other possible causes of vibration.

Figure 3-4 is a chart that lists the most common vibration frequencies as they relate to rotating speed (RPM), along with the common causes for each frequency. To illustrate how this chart is used, if the frequency of excessive vibration was found to be 2400 CPM or 1 x RPM of the belt driven fan described in the above example, the possible causes listed on the chart would be:

- Unbalance
- Misalignment (this could be misalignment of the fan bearings or misalignment of the motor and fan pulleys)
- Eccentric Pulley
- Bent Shaft
- Looseness
- Distortion-Soft feet or piping strain
- Bad Belts- if belt rpm
- Resonance
- Reciprocating forces
- Electrical problems

Using this simple chart along with the fact that the frequency of excessive vibration is 2400 CPM (1x fan RPM) has reduced the number of possible causes from literally hundreds to only

ten (10) possible causes.

A little common sense can reduce this number of possible causes even further. First, since the vibration frequency is NOT related to the rotating speed (RPM) of the drive belts, belt problems can be eliminated as a possible cause. Secondly, since this is not a reciprocating machine such as reciprocating compressor or engine, the possibility of reciprocating forces can be eliminated from the remaining list. Finally, since the frequency is not related to the drive motor in any way, the possibility of electrical problems can be eliminated. Now, the number of possible causes of excessive vibration has been reduced to only seven (7) by simply knowing that the vibration frequency is 1 x RPM of the fan.

Vibration analysis is truly a process of elimination. Chapter 5 on Vibration Analysis outlines additional tests and measurements that can be taken to further reduce the number of possible causes of a vibration problem. However, it should be obvious that knowing the frequency of vibration and how the frequency relates to the rotating speed of the machine components is truly the first step in the analysis process.

Vibration Frequencies and the Likely Causes

Frequency In Terms of RPM	Most Likely Causes	Other Possible Causes & Remarks-
1 x RPM	Unbalance	1) Eccentric Journals, gears or pulleys 2) Misalignment or bent shaft if high axial vibration 3) Bad belts if RPM of belt 4) Resonance 5) Reciprocating forces 6) Electrical problems
2 x RPM	Mechanical Looseness	1) Misalignment if high axial vibration 2) Reciprocating forces 3) Resonance 4) Bad belts if 2 x RPM of belt
3 x RPM	Misalignment	Usually a combination of misalignment and excessive axial clearances (looseness).
Less than 1 x RPM	Oil Whirl (Less than 1/2 RPM)	1) Bad drive belts 2) Background vibration 3) Sub-harmonic resonance 4) "Beat" Vibration
Synchronous (A.C. Line Frequency)	Electrical Problems	Common electrical problems include broken rotor bars, eccentric, rotor, unbalanced, phases in poly-phase systems, unequal Air gap.
2 x Synch. Frequency	Torque Pulses	Rare as a problem unless resonance is excited
Many Times RPM (Harmonically Related Freq.)	Bad Gears Aerodynamic Forces Hydraulic Forces Mechanical Looseness Reciprocating Forces	Gear teeth times RPM of bad gear Number of fan blades times RPM Number of impeller vanes times RPM May occur at 2, 3, 4 and sometimes higher harmonics If severe looseness
High Frequency (Not Harmonically Related)	Bad Anti-Friction Bearings	1) Bearing vibration may be unsteady - amplitude and Frequency 2) Cavitations, recirculation and flow turbulence cause random, High frequency vibration 3) Improper lubrication of journal bearings (Friction excited vibration) 4) Rubbing

Figure 3-4: Vibration frequencies and the likely causes

COMPLEX VIBRATION:

Figure 3-5 illustrates the response of a spring-mass system to a single exciting force (unbalance). The result is a vibration having only one frequency. This is called a simple

vibration. In reality, machines can often have several causes of vibration, with each cause having its own unique frequency. Whenever more than one frequency of vibration is present, the result is called a complex vibration. Figure 3-5 shows a belt driven fan with several different vibration frequencies resulting from different problems. Of course, each vibration frequency present can be readily identified along with its cause using standard analysis equipment and techniques.

Several terms are used to describe various frequencies of vibration, and it is important for the vibration technician to understand these terms in order to communicate effectively with others in the field of machinery vibration. Some of the more common terms describing vibration frequencies are listed below along with their definitions.

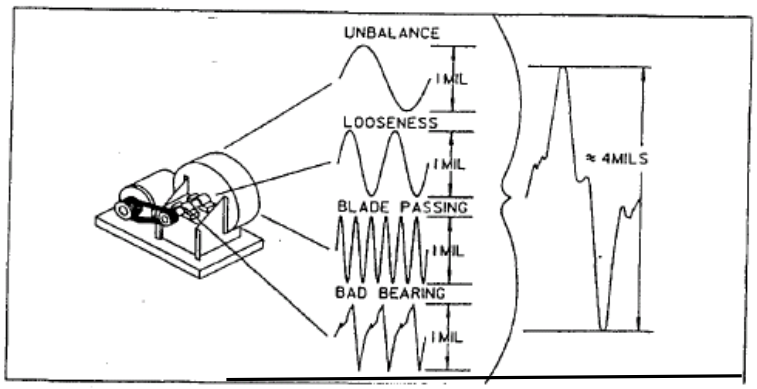

Figure 3-5: Most machinery vibration is complex, consisting of many frequencies.

Predominant Frequency: Predominant frequency is the frequency of vibration -having the highest amplitude or magnitude.

Synchronous Frequency: Synchronous frequency is the vibration frequency that occurs at 1 x RPM.

Sub synchronous Frequency: Sub synchronous frequency is vibration occurring at a frequency **below 1** x RPM. A vibration that occurs at 1/2 x RPM would be called a sub synchronous frequency.

Fundamental Frequency: Fundamental frequency is the lowest or first frequency normally associated with a particular problem or cause. For example, the product of the number of teeth on a gear times the RPM of the gear would be the fundamental gear-mesh frequency. On the other hand, coupling misalignment can generate vibration at frequencies of 1x, 2x and sometimes 3 x RPM. In this case, 1 x RPM would be called the fundamental frequency.

Harmonic Frequency: A harmonic is a frequency that is an exact, whole number multiple of a fundamental frequency. For example, a vibration that occurs at a frequency of two times the fundamental gear mesh frequency would be called the second harmonic of gear mesh frequency. A vibration at 2 x RPM due to, say, misalignment, would be referred to as the second harmonic of the running speed frequency (1 x RPM).

Order Frequency: An order frequency is the same as a harmonic frequency.

Sub harmonic Frequency: A sub harmonic frequency is an exact submultiples (1/2, 1/3, 1/4, etc.) of a fundamental frequency. For example, a vibration with a frequency of exactly 1/2 the fundamental gear-mesh frequency would be called a sub harmonic of the gear mesh frequency. Vibration at frequencies of exactly 1/2, 1/3 or 1/4 of the rotating speed (1 **x RPM)** frequency would also be called sub harmonic frequencies; and these can also be called sub synchronous

frequencies. However, not all sub synchronous frequencies are sub harmonics. For example, a vibration with a frequency of 43% of the running speed (1 x RPM) frequency is a sub synchronous frequency but it is not a sub harmonic.

3.4 VIBRATION AMPLITUDE

As mentioned earlier, vibration frequency is a diagnostic tool, needed to help identify or pinpoint specific mechanical or operational problems. Whether or not a vibration frequency analysis is necessary, depends on how "rough" the machine is shaking. If the machine is operating smoothly, knowing the frequency or frequencies of vibration present is not important. The magnitude of vibration or how rough or smooth the machine vibration is, is expressed by its vibration amplitude. Vibration amplitude can be measured and expressed as:

- Displacement
- Velocity
- Acceleration

The following paragraphs describe each of these units of vibration amplitude, their significance and applications

3.4.1 VIBRATION DISPLACEMENT

Figure 3-6 shows the time waveform generated by the up-and-down motion of the spring-mass system illustrated in Figure 3-1. The vibration displacement is simply the total distance traveled by the vibrating part from one extreme limit of travel to the other extreme limit of travel. This distance is also called the "peak-to-peak displacement".

Peak-to-peak vibration displacement is normally measured in units called mils; where one mil equals one-thousandth of an inch (1 mil = 0.001 inch). Measured vibration amplitude of 10 mils simply means that the machine is vibrating a total distance of 0.01 inches peak-to-peak.

In Metric units, the peak-to-peak vibration displacement is expressed in micrometers (sometimes called microns), where one micrometer equals one thousandth of a millimeter (1 micrometer = 0.001 millimeter).

Electronic instruments for measuring vibration on industrial rotating machinery did not become readily available until the late 1940's and early 1950's, although the significance and importance of measuring vibration as an indicator of machinery condition had been well known for decades. Until the introduction of electronic instruments, instruments used to physically measure a machine's vibration were mechanical devices such as seismically mounted dial indicators, light-beam vibrometers and mechanical linkage devices that magnified the relatively small amplitudes of machinery vibration to levels that could be visually observed. Obviously, with these mechanical devices, the only parameter of vibration that could be measured was the peak-to-peak displacement. As a result, the first guidelines and acceptance standards for machinery vibration were given in units of vibration displacement. Figure 3-7 shows one of the earliest published guide lines for evaluating vibration displacement.

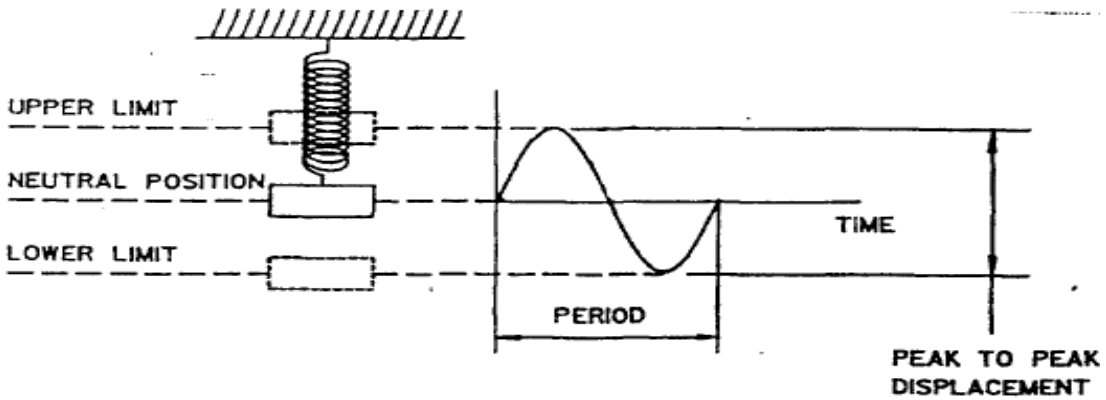

Figure 3-6: peak-peak displacement is the total distance traveled by the part

Of course, in the 1930's when this chart was developed, the instrumentation for measuring was rather limited, particularly in the range of vibration frequencies that could be measured. Note that the T. C. Rathbone chart is limited to a maximum frequency of only 6000 CPM. The introduction of electronic instruments for vibration detection and analysis made it possible to measure much higher frequencies. General Machinery Vibration Severity Charts in Figure 3-7 (English units) and Figure 3-8 (Metric Units) include vibration frequencies up to 100,000 CPM.

From these charts, it is apparent that the severity or significance of a vibration is dependent not only on the peak-to-peak displacement, but the frequency at which the vibration occurs as well. For example, according to the T. C. Rathbone chart, a vibration of 6 mils peak-to-peak displacement occurring at a low frequency of 120 CPM would be in the "GOOD" range, whereas the same vibration displacement of 6 mils at a frequency of 3600 CPM would be considered "VERY ROUGH". Note that the General Machinery Vibration Severity Chart, Figure 3-8, provides the same interpretation.

The fact that the severity of a vibration depends not only on displacement but frequency as well is understandable when one realizes that the vast majority of machinery failures caused by problems that generate vibration are FATIGUE problems. To illustrate, consider what happens when a piece of wire is repeatedly bent back and forth. This repeated bending eventually causes the wire to break due to fatigue in the area of the bend. In many respects, this is exactly the way a machine component fails-from the repeated cycles of flexing caused by excessive vibratory forces.

Considering the example of repeatedly bending a piece of wire, there are two ways to reduce the amount of time required to achieve fatigue failure. One is to increase the distance (displacement) that the wire is bent. The farther the wire is bent each time, the less time it will take to reach fatigue. The other is to increase the number of times per minute or second (frequency) the wire is bent. The more times per minute the wire is flexed the less time it will take to reach fatigue failure. Thus, the severity of vibration is dependent on both vibration displacement and frequency. This fact is clearly indicated by the vibration displacement severity charts and Figures 3-7, 3-8, 3-9.

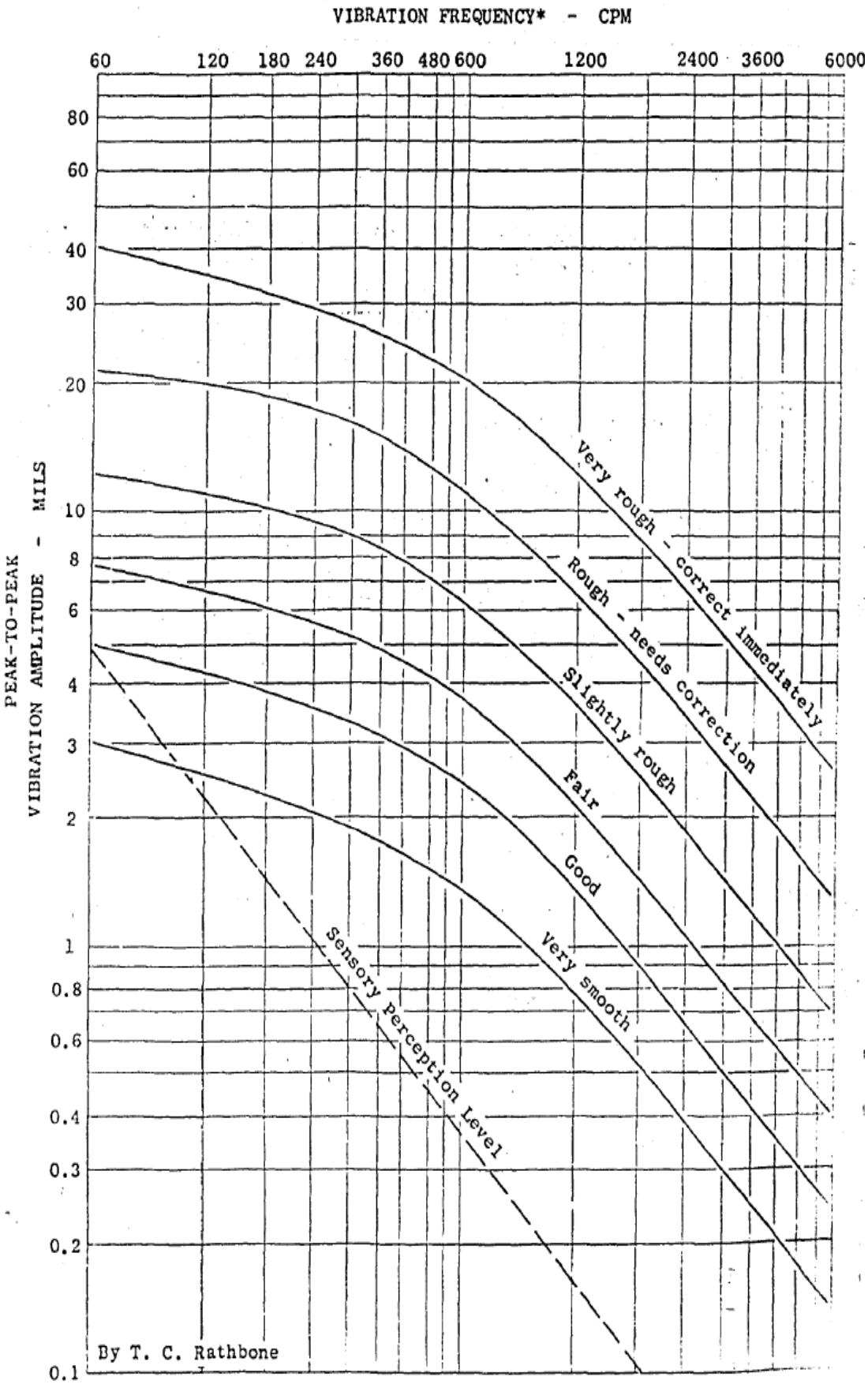

*** Frequency corresponds to RPM when dynamic imbalance is the cause of vibration**

Figure 3-7: The T. C Rathbone Chart

GENERAL MACHINERY VIBRA TION SEVERITY CHART

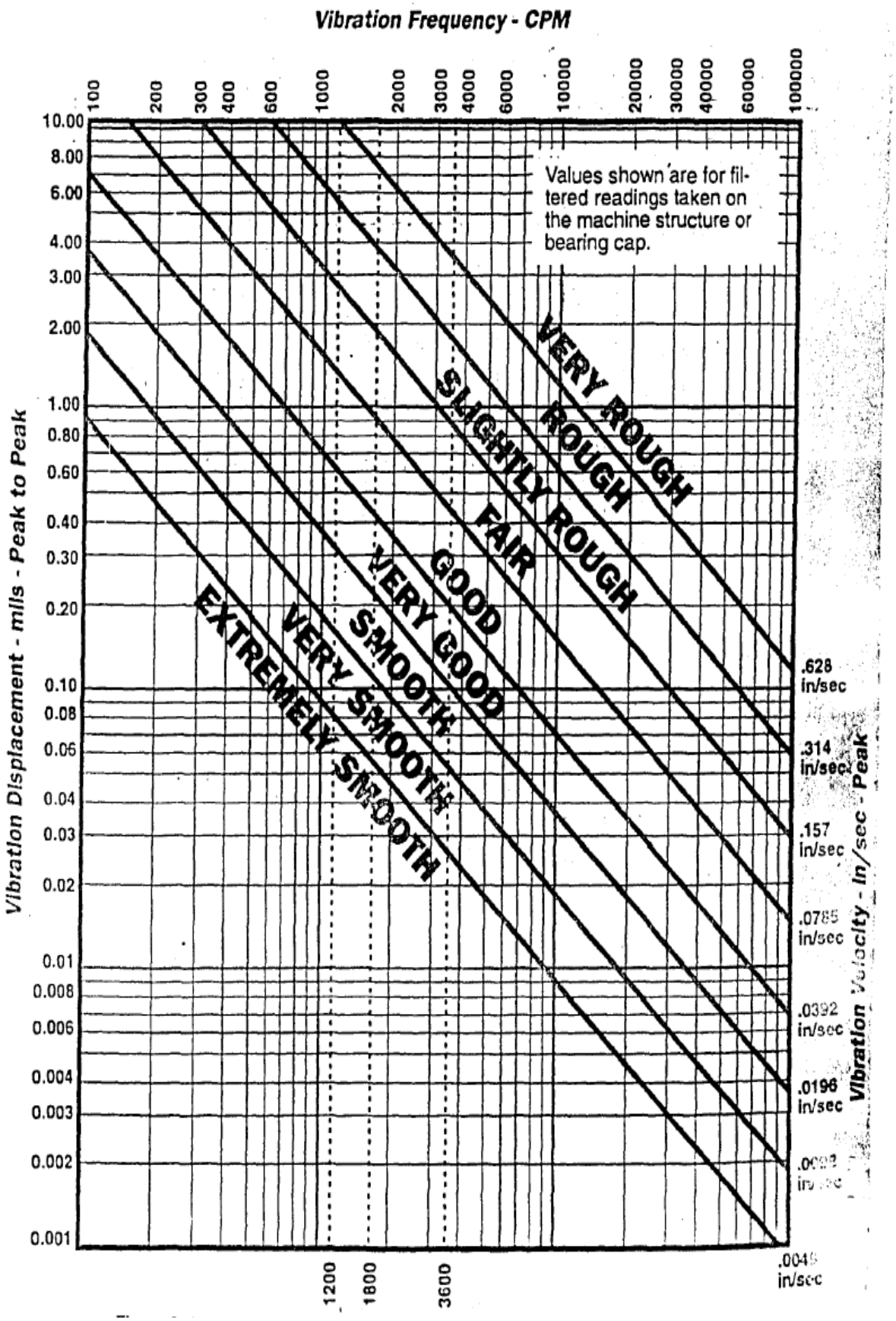

Figure 3-8: General Machinery Vibration Severity Chart (English Units)

METRIC MACHINERY VIBRATION SEVERITY CHART

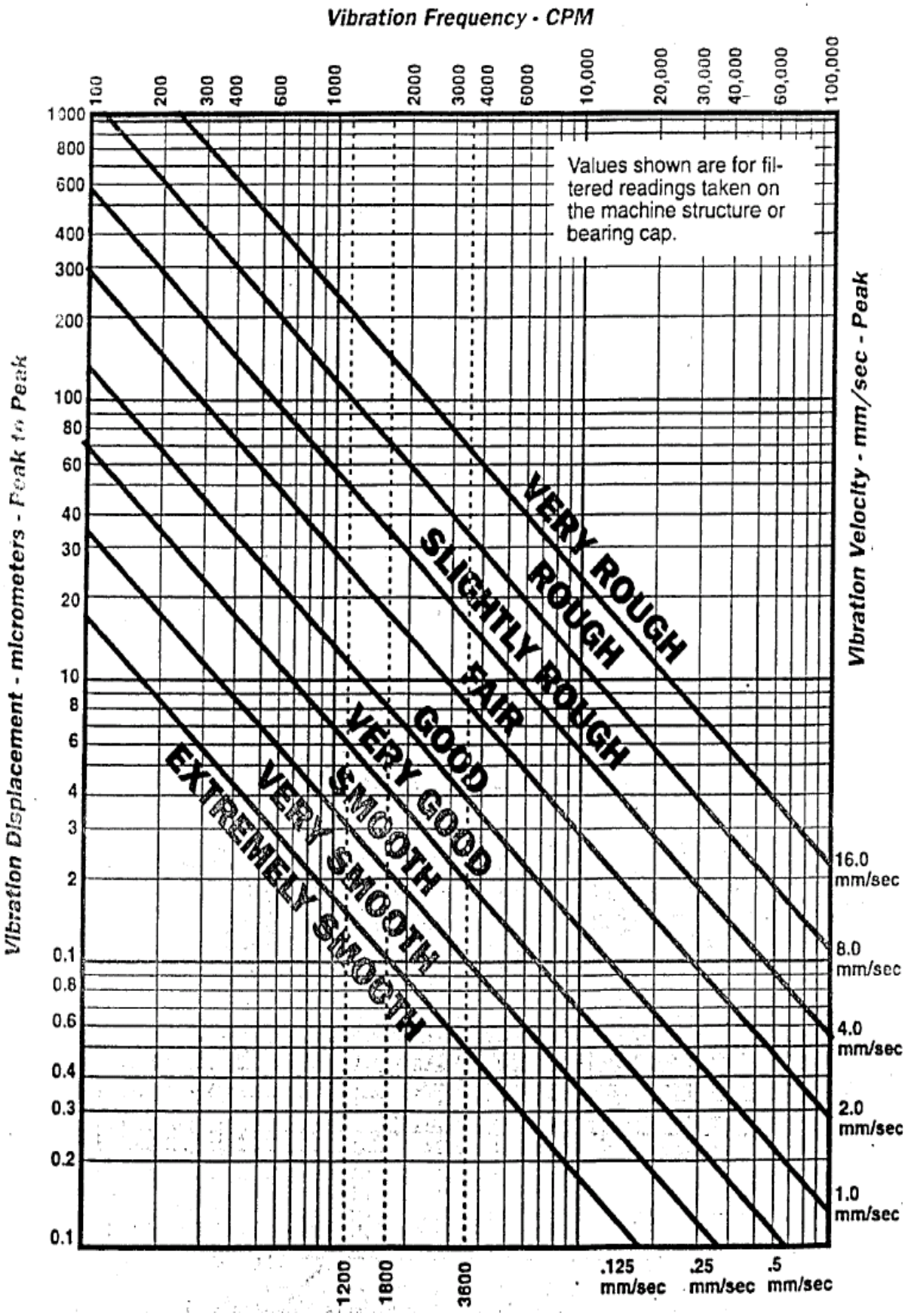

Figure 3-9: General Machinery Vibration Severity Chart (Metric Units)

There are many factors that determine the normal or inherent vibration characteristics of a machine. How and where the machine is mounted is one consideration. In most cases, a machine that is bolted to a rigid base will have inherently less vibration than one that is mounted on spring isolators or rubber pads. Machines such as hammer mills or rock crushers may have much higher levels of normal vibration than other machines, simply because of what they do. When it is not known whether a machine's vibration level is normal or indicative of developing trouble one can:

1. Compare the machine's vibration characteristics with other identical or similar machines. If a machine has a level of vibration 2 or 3 times higher than that of similar machines, some problem is usually indicated, and a thorough analysis should be carried out to pinpoint the cause for correction.
2. Check the machine's vibration on a frequent and regular basis. Normally, machines that have significant problems will show signs of deterioration through increasing levels of vibration. If this is the case, a thorough analysis should be performed at the earliest opportunity to pinpoint the cause for correction. On the other hand, if the vibration levels remain unchanged over a long period of time, the vibration may be considered as normal or inherent for this type of equipment.

THE PROBLEM WITH DISPLACEMENT

Although measurements of vibration displacement have been used for many years to evaluate machinery condition, the fact that it is necessary to know the frequency as well, makes the use of displacement somewhat cumbersome when dealing with a vibration predictive maintenance program that may include virtually hundreds of machines and literally thousands of measurements. To evaluate each machine's displacement and frequency characteristics using severity charts such as those in Figures 3-7, 3-8 and 3-9 would be an extremely time consuming task. In addition, it has already been shown that machinery vibration is not always simple or occurring at only one frequency. In many cases, machinery vibration will be complex, consisting of many frequencies. In such cases, it is nearly impossible to use vibration displacement to judge the "overall" condition of a machine. For example, assume that a machine operating at 1800 RPM has a vibration displacement of 1 mil peak-to-peak at a frequency of 1800 CPM due to unbalance. According to the chart in Figure 3-8, this would be considered "FAIR". In addition, assume that the machine also has a vibration displacement of 0.5 mils at a frequency of 3600 CPM (2 x RPM) due to misalignment. This vibration also would be considered "FAIR" according to the chart in Figure 3.8. Although one might be inclined to judge the condition of the machine as "FAIR", this is not the case. It must be remembered that each source of vibration contributes to the ultimate fatigue of machine components, and the "overall" condition of the machine can only be determined by an overall measurement of vibration that takes into account all frequencies of vibration. This is accomplished by measuring VIBRATION VELOCITY.

3.4.2 VIBRATION VELOCITY

It was pointed out earlier that the vast majority of machine failures caused by vibration problems are fatigue failures. And, the time required to achieve fatigue failure is determined by both how far an object is deflected (displacement) and the rate at which the object is deflected (frequency). Of course, displacement is simply a measure of the distance traveled and frequency is a measure of the number of times the "trip" is taken in a given period of time such as a minute or second. If it is known how far one must travel in a given period of time, it is a simple matter to calculate the speed or velocity required. Thus, a measure of vibration velocity

is a **direct measure of fatigue.** In short:

Fatigue = Displacement x Frequency

Velocity = Displacement x Frequency

Thus: Velocity = Fatigue

Vibration velocity is a measurement of the speed at which a machine or machine component is moving as it undergoes oscillating motion. Figure 3-10 shows the time waveform of the vibrating spring-mass system from Figure 3-1. Since the weight is moving, it must be moving at some speed determined by the displacement and frequency. However, the speed of the weight is constantly changing. At the upper and lower limits of travel, the velocity is zero (0), since the weight must come to a stop before it can go in the opposite direction. The velocity is the greatest or at its peak as the object passes through the neutral position. Velocity is definitely a characteristic of the vibration, but since it is constantly changing throughout the cycle, the highest or "peak" velocity is selected for measurement.

Vibration velocity is expressed in inches-per-second peak (in/sec-pk) for English units. In Metric units, vibration velocity is expressed in millimeters-per-second peak.

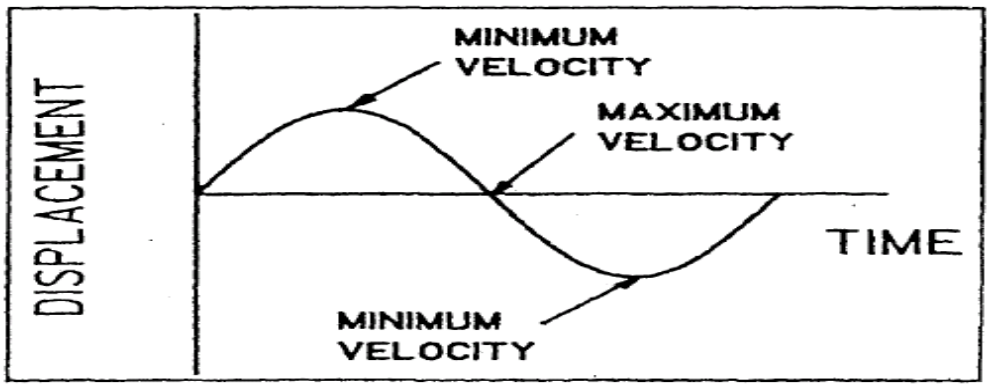

Figure 3-10: Velocity of a vibrating object

The fact that vibration velocity is a direct indicator of fatigue and vibration severity is clearly indicated by the General Machinery Vibration Severity Charts, Figures 3-8 and 3-9. Note that the diagonal lines that separate the different regions of severity are constant velocity values. For example, the line dividing the "ROUGH" and "VERY ROUGH" regions has a velocity value of 0.628 in / sec-peak (16 mm / sec-peak). Thus, a machine having a measured vibration velocity in excess of 0.628 in / sec-peak (16 mm/sec-peak) would be considered "VERY ROUGH", regardless of the vibration frequency.

The benefits and advantages of measuring vibration velocity instead of vibration displacement include:

1. Vibration velocity is a direct indicator of fatigue since it takes into accounts both displacement and frequency.
2. It is not necessary to know the frequency of vibration in order to evaluate the severity of vibration velocity since frequency is already a part of velocity.
3. A measurement of overall vibration velocity is a valid indicator of the overall condition of a machine whether the vibration is simple (one frequency) or complex (more than one frequency).

For the reasons listed above, **vibration velocity has become the industry standard for evaluating machinery condition based on vibration.**

Vibration Acceleration

Figure 3-11 showed that the speed or velocity of a vibrating object is constantly changing. At the extreme limits of travel the velocity is zero (0) since the object must stop momentarily to change direction. Of course, each time the object comes to a stop at the limit of travel; it must "accelerate" to pick up speed as it travels towards the other extreme limit of travel.

3.4.3 VIBRATION ACCELERATION

is another important characteristic of vibration that can be used to express the amplitude or magnitude of vibration. Technically, **acceleration is simply the rate of change of velocity.**

Referring to the time waveform plot of the vibrating spring-mass system in Figure 3-11, the acceleration of the weight is maximum or at its peak value at the upper limit of travel where the velocity is zero (0). As the velocity of the weight increases, the rate of change of velocity or acceleration decreases. At the neutral position, the weight has reached its maximum or peak velocity and at this point, the acceleration is zero (0). After the weight passes through the neutral position, it must begin to slow down or "decelerate" as it approaches the lower limit of travel. At the lower limit of travel the rate of change of velocity (acceleration) is, again, at its peak value.

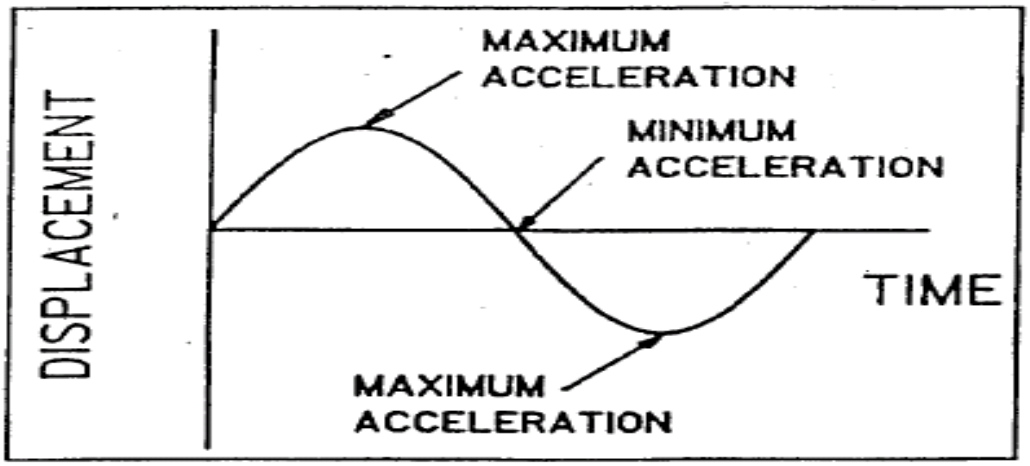

Figure 3-11: Acceleration (G's) of a vibrating part

As with velocity, since the value of vibration acceleration is constantly changing, the highest or **peak acceleration** is selected for measurement.

Since vibration acceleration is technically the rate of change of vibration velocity (in/sec-peak or mm/sec-peak), it follows that the units of vibration acceleration could be expressed in in/sec/sec-peak or mm/sec/sec-peak. This can also be written as:

$$\text{in/sec/sec} = \text{in/sec}^2$$

Or: $$\text{mm/see/sec} = \text{mm/sec}^2$$

However, by international agreement, levels of machinery vibration acceleration are expressed in units of "G's", where one (1) "G" is the acceleration produced by the Earth's gravitational force at sea level. By international agreement, the values of 980.665 cm/sec/sec, 386.087 in/sec/sec and 32.1739 feet/sec/sec have been established as the standard acceleration values

due to Earth's gravity at sea level. Thus, a measured vibration acceleration of 1-G peak would be approximately 386 in / sec/sec (980 cm / sec / sec).

It should be kept in mind that the Earth's gravitational force (G) has little to do with a machine's vibration amplitude. A machine with mechanical and/or operational problems will vibrate regardless of where it is located-on Earth or in gravity-free outer space. The accepted practice of expressing vibration acceleration amplitudes in G's is simply one of convenience and familiarity.

As with vibration amplitudes expressed in displacement and velocity, some guidelines are needed to evaluate vibration amplitudes measured in G's acceleration. The chart in Figure 3-12 has been developed after many years of experience on all types of industrial machinery. It should be noted that judging or evaluating vibration acceleration (G) measurements is similar to evaluating vibration displacement measurements in that it is necessary to know the specific frequency of vibration. For example, from the chart in Figure 3-12, a vibration acceleration of 1.0 G occurring at a frequency of 18,000 CPM (300 Hz) would fall in the SLIGHTLY ROUGH range, whereas a vibration of 1.0 G at a frequency of 600,000 CPM (10,000 Hz) would fall between the **GOOD** and **VERY GOOD** regions of the chart.

It should also be noted that the vibration acceleration severity chart in Figure 3-12 only covers high frequencies of vibration-above 18,000 CPM.

VIBRATION ACCELERATION GENERAL SEVERITY CHART

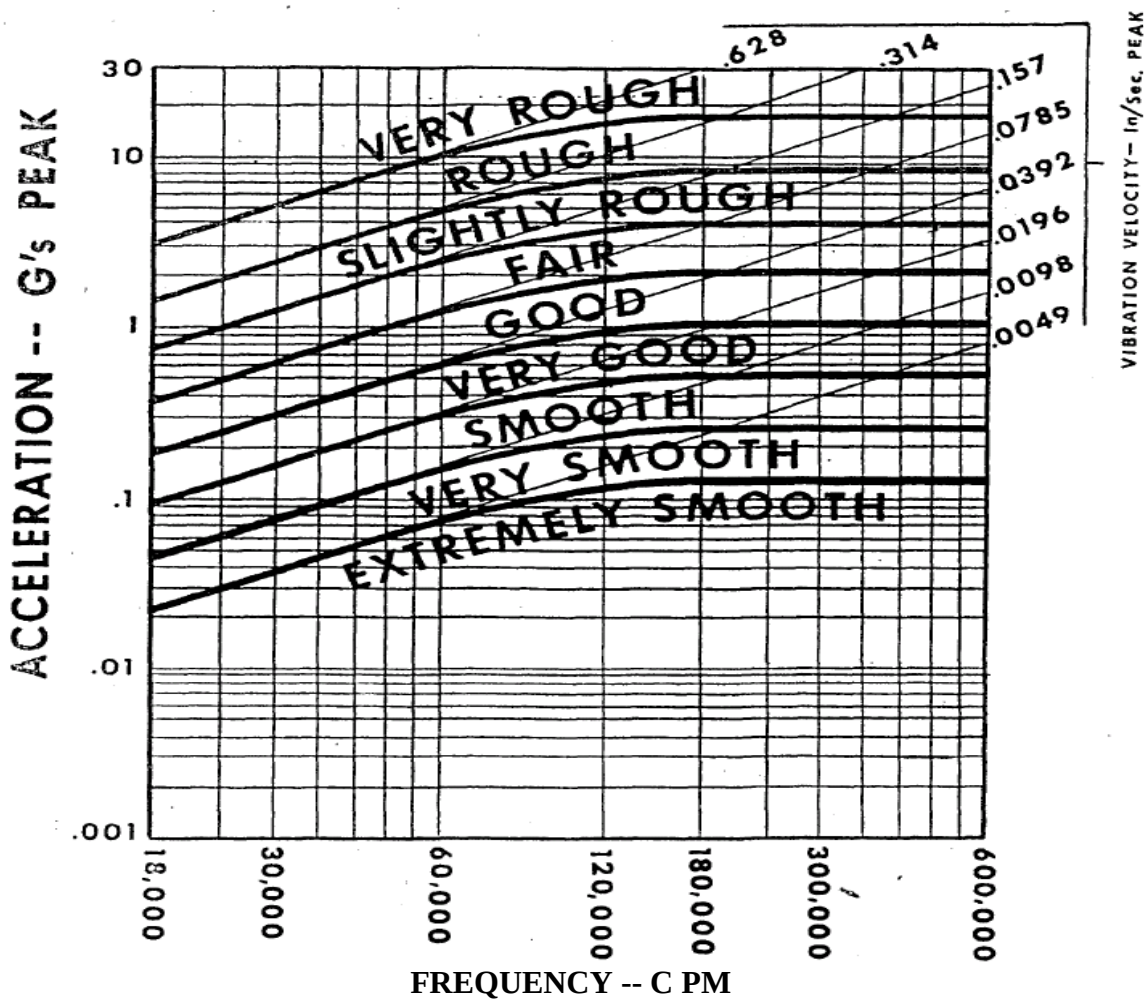

Figure 3-12: Vibration acceleration (G's) severity chart

3.5 CONVERSION OF MEASUREMENT PARAMETERS

For simple vibration, consisting of only one frequency, the values of displacement, velocity and acceleration are all mathematically related as shown by the conversion formulas in Figure 3-13. For example, if the displacement and frequency of a vibration are known, the vibration velocity or vibration acceleration can simply be calculated using the appropriate formula. These conversion formulas do not apply to complex vibration.

ENGLISH UNITS

Where
D = Peak-To-Peak Displacement (Mils Pk-Pk)
V = Peak Velocity (In/Sec-Pk)
A = Peak Acceleration (G's-Pk)
F= Frequency (CPM)

V = DF/19,100	D = 19,100V/F
V = 3690 A/F	A = VF/3690
A = DF^2/70,470,910	D = 70,470,910A/F^2

METRIC UNITS

Where
D = Peak-To-Peak Displacement (Mils Pk-Pk)
V = Peak Velocity (In/Sec-Pk)
A = Peak Acceleration (G's-Pk)
F= Frequency (CPM)

V = DF/19,100	D = 19,100V/F
V = 93,640 A/F	A = VF/93,640
A = DF^2/1,790,000,000	D = 1,790,000,000A/F^2

Figure 3-13: Vibration parameter conversion formulas

3.6 WHEN TO USE DISPLACEMENT, VELOCITY AND ACCELERATION

From the preceding discussions, it should be apparent that the magnitude or amplitude of machine vibration can be expressed in units of displacement, velocity or acceleration. In addition, it was pointed out that the vast majority of machine failures were the result of fatigue, that vibration velocity was a direct measure of the fatigue aspect of vibration and that most machinery vibration acceptance standards were, in fact, based on vibration velocity measurements. The obvious question at this point should be: "Why measure vibration displacement or acceleration?" Actually, the answer is quite simple. Although the vast majority of machinery failures are, in fact, due to fatigue, which is directly related to vibration velocity, there are two other causes or "mechanisms" of machinery failure-stress and force-that are directly related to vibration displacement and acceleration respectively.

3.7 WHEN TO USE DISPLACEMENT AS AN INDICATOR OF STRESS PROBLEMS

The fatigue failure of machine components from repeated cycles of flexing and the direct relationship between vibration velocity and fatigue have been explained in the preceding sections of this Chapter. However, due to brittleness, many machines; components may crack or break if simply bent or deflected (displaced) beyond a certain limit. High amplitudes of vibration displacement may cause mounting bolts to snap, welds to give way or concrete bases and foundations to crack-not because of fatigue, but simply because they were deflected beyond their yield points.

Where high amplitudes of vibration displacement usually occur that result in stress failures. This high amplitude is typically at very low vibration frequencies, generally below 600 CPM (10 Hz). For example, consider a machine that has a vibration displacement of 100 mils occurring at a frequency of only 50 CPM. Using the conversion formula in Figure 3-13, the corresponding vibration velocity is found to be only 0.26 in/sec.

$$\text{Velocity (in/sec)} = \frac{\text{D (mils) x F(CPM)}}{19{,}100}$$

$$\text{Velocity (in/sec)} = \frac{\text{100miIs x 50(CPM)}}{19{,}100}$$

$$\text{Velocity (in/sec)} = \frac{5.000}{19{,}100}$$

$$\text{Velocity (in/sec)} = 0.26 \text{ in/sec}$$

According to the severity guidelines in Figures 3-8, a vibration velocity of only 0.26 in/sec would probably be considered between the FAIR and SLIGHTLY ROUGH regions and not a cause for immediate concern.

However, it must be remembered that the machine is being deflected 100 mils which is 0.1 inch. Under these conditions, failure will most likely occur due to stress (displacement) rather than fatigue (velocity). For this reason, whenever it is anticipated that vibration frequencies may be present at frequencies below 600 CPM (10 Hz), measurements of vibration displacement are recommended.

3.8 WHEN TO USE VIBRATION VELOCITY TO DETECT FATIGUE PROBLEMS

As a general rule, fatigue failures typically result from vibration frequencies between **approximately 600 CPM (10 Hz) and 120,000 CPM (2000 Hz).** Therefore, when vibration frequencies within this range are anticipated, measurements of vibration velocity are recommended.

3.9 WHEN TO USE VIBRATION ACCELERATION TO DETECT FORCE PROBLEMS

The concept of relating stress to displacement and fatigue to velocity is fairly simple and straightforward. Perhaps the easiest way to demonstrate force as a cause of trouble is to simply consider striking an object with a hammer. The impact may not cause significant displacement or velocity; however, resultant damage can be considerable.

From our earliest science classes we were taught that force equals mass times acceleration (F = M x A). From this simple formula, it is apparent that vibration acceleration is directly proportional to vibratory force. And, since vibration acceleration increases proportional to the square of vibration frequency, very large vibratory forces can occur at high frequencies of vibration even though the displacement and velocity amplitudes may be quite small. To illustrate, assume that a machine has a measured vibration velocity of 0.25 in / sec-peak occurring at a frequency of 600,000 CPM (2000 Hz), perhaps due to a gear problem. From the conversion formulas in Figure 3-13, the resultant vibration acceleration is found to be over 40 G's.

$$\text{Acceleration (G's)} = \frac{\text{V (in/sec) x F(CPM)}}{3{,}690}$$

$$\text{Acceleration (G's)} = \frac{\text{0.25 in/sec x 60,000 CPM}}{3{,}690}$$

$$\text{Acceleration (G's)} = \frac{150{,}000}{3{,}690}$$

$$\text{Acceleration (G's)} = 40.65 \text{ G's}$$

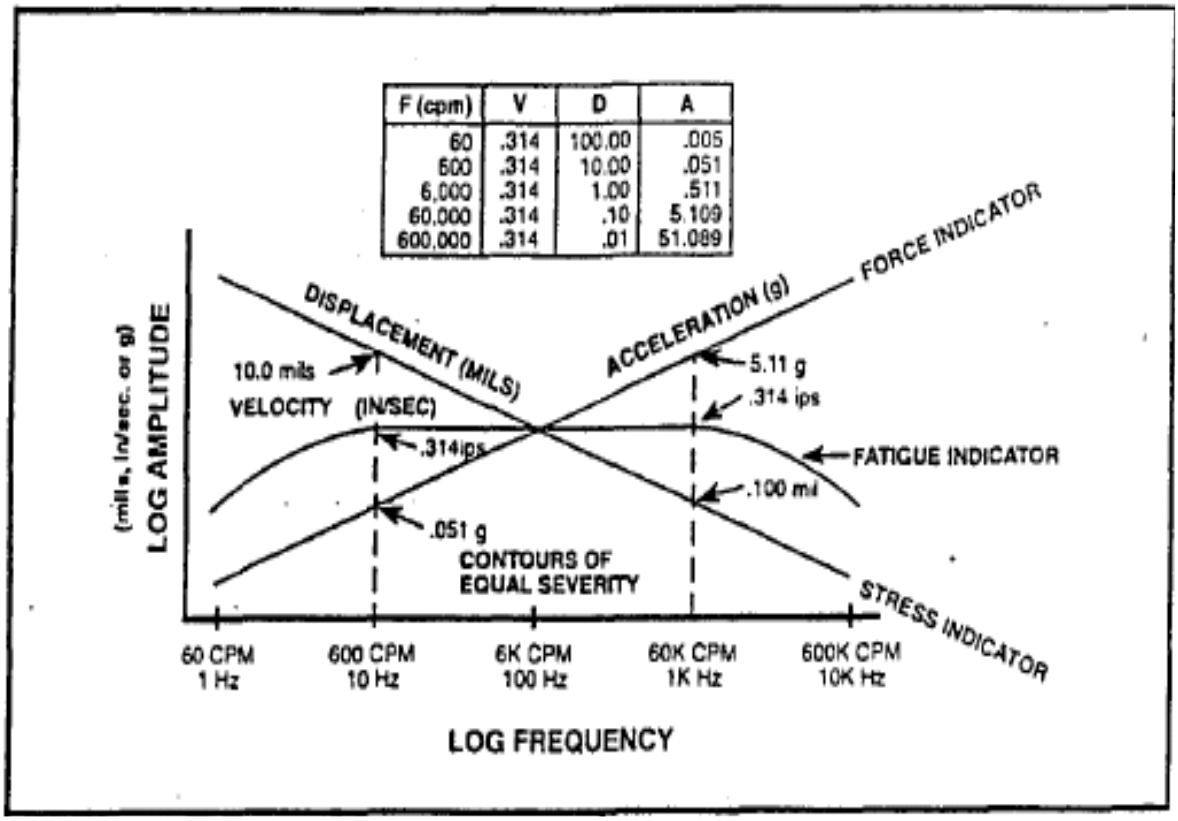

Figure 3-14: Contours of equal severity

3.10 PHASE

In addition to frequency (Hz or CPM) and amplitude (displacement, velocity, acceleration), the third and final characteristic needed to describe a machine's vibration behavior is **PHASE.**

Phase, with regards to machinery vibration, is-often defined as "the position of a vibrating part at a given instant with reference to a fixed point or another vibrating part'. Another definition of phase is: "that part of a vibration cycle through which one part or object has moved relative to another part".

The concept of "phase" is often the most confusing to newcomers to the field of vibration detection and analysis; however, from a practical standpoint, phase is simply a convenient means of determining the "relative motion" of two or parts of a machine or vibrating system. The units of phase are degrees, where one complete cycle of vibration equals 360 degrees.

To demonstrate phase, the two weights in Figure 3-15 are vibrating at the same amplitude and frequency; however, weight "A" is at the upper limit of travel ready to move downward while, at the same instant, weight "B" is at the lower limit of travel ready to move upward. Phase can be used to express this comparison. By plotting once cycle of motion of these two weights, it can be seen in Figure 3-15 that the points of peak amplitude are separated by a half cycle or 180 degrees (one complete cycle = 360 degrees). Therefore, these two weights are vibrating 180 degrees "out of phase". In Figure 3-16, weight "X" is at the upper limit of travel prepared to move downward. At the same instant, weight "Y" is already at the neutral position, moving toward the lower limit. In this case, weight "Y" is leading weight "X" by one quarter of a cycle or 90 degrees. Therefore, these weights are vibrating 90 degrees "out of phase"

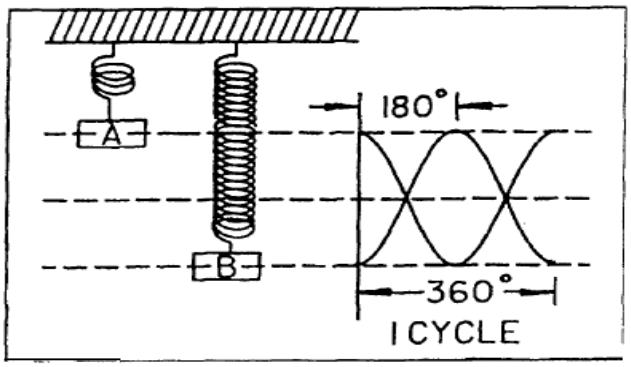

Figure 3-15: Weights Vibrating 180 degrees out of phase

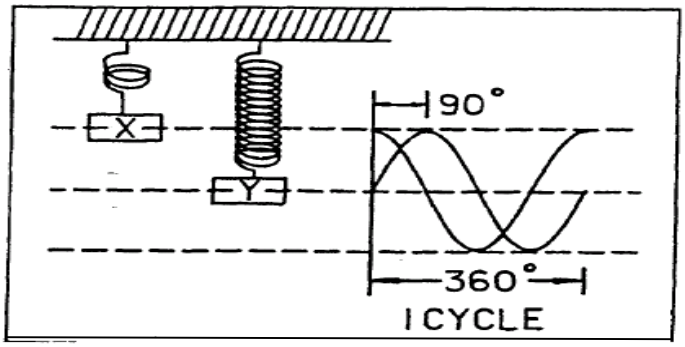

Figure 3-16: weights vibrating 90 degrees out of phase

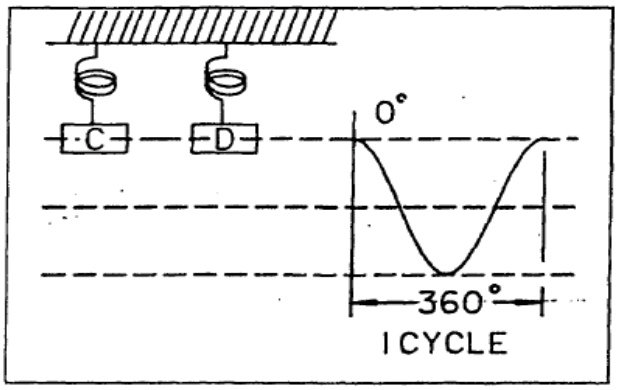

Figure 3-17. Weights vibrating 0 degrees out-of-phase or "in-phase."

In Figure 3-17 weights "C" and "D" are at the upper limit of travel at the same instant, prepared to move downward. These weights are vibrating "in phase" or 0 degrees out of phase.

3.10.1 SIGNIFICANCE OF PHASE

Normally, phase measurements are not taken during routine periodic checks or the "detection" phase of a predictive maintenance program. However, when a developing problem is detected, comparative phase measurements can provide invaluable information as part of the analysis to aid in pinpointing the specific problem. For example, it was shown in Figure 3-4 that there are several common problems that cause vibration at a frequency of 1 x RPM, including:

- Unbalance
- Bent shafts

- Misalignment of couplings, bearings and pulleys
- Looseness
- Distortion from soft feet and piping strains Resonance
- Reciprocating forces
- Eccentric Pulleys and gears

Determining the "relative motion" of various machine components can help greatly to reduce this list of possible causes.

Dynamic balancing is an important application for phase measurements. When the problem is unbalance, the ability to measure phase makes it possible to balance the part quickly and easily without "trial and error" techniques. In many cases, rotating assemblies can be balanced in-place, eliminating the need for costly disassembly.

3.10.2 PHASE MEASUREMENT TECHNIQUES

There are many ways to measure the phase of machinery vibration, depending on the type in vibration analysis instrumentation available. However, the two most common methods of phase measurement provided with most portable vibration analyzers and data collectors are:

1. The stroboscopic (strobe) light
2. Digital phase angle display

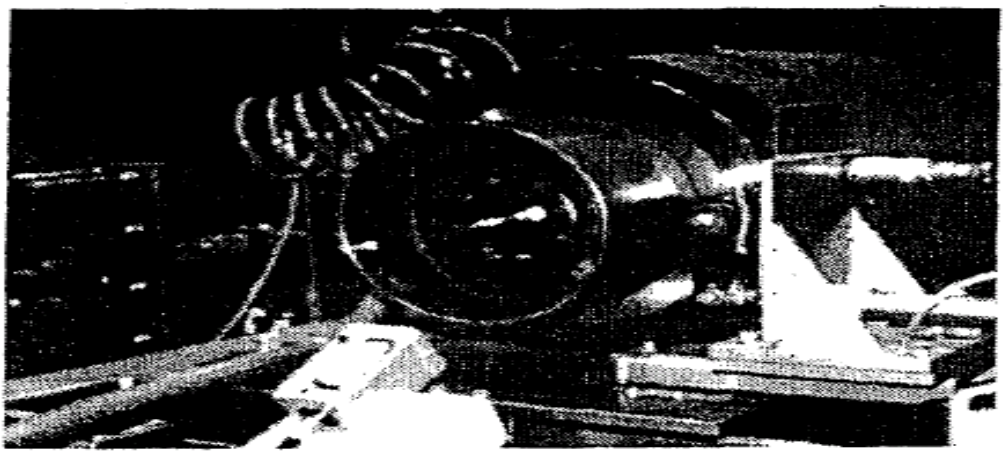

Figure 3-18. This phase reading is approximately 8:30 o'clock or 250 degrees.

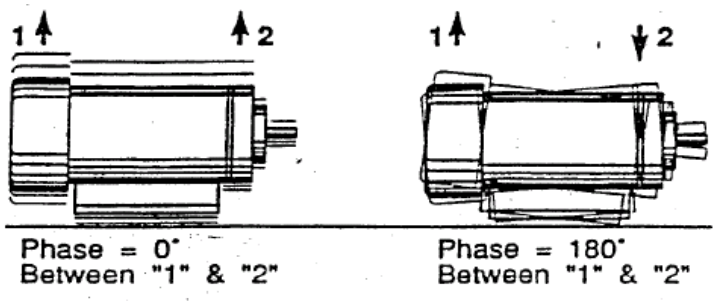

Figure 3-19: Comparative phase readings show "how" the machine is vibrating

3.11 INSTRUMENTS FOR VIBRATION DETECTION AND ANALYSIS

Instruments for measuring and analyzing machinery vibration are available in a wide array of features and capabilities, but are generally categorized as:

1. Vibration meters
2. Vibration frequency analyzers

Simple hand-held vibration meters, such as the one shown in Figure 3-20, provide measurements of "overall" machinery vibration displacement, velocity, acceleration for quick evaluation of machinery and bearing condition. The vibration meter in Figure 3-21 has only one button for operation making it extremely easy to use for taking overall vibration readings. Depressing the button turns the instrument on. The operator simply holds the built-in probe against the machine and notes the digital amplitude reading. After the button is released, the reading will remain on the display. After a few seconds, the instrument will automatically turn itself off to conserve battery life.

Figure 3-20: A typical vibration meter for measuring overall displacement, velocity, acceleration

Hand-held vibration meters such as those shown in Figures 3-20 and 3-21 are very easy to use and require little operator training, aside from an understanding of the characteristics of vibration and their significance. By comparison, vibration frequency analyzers, which include most data collectors used for predictive maintenance programs, require further understanding in their proper setup, operation and interpretation of data presented. In the past, many machinery problems have gone undetected or were diagnosed incorrectly simply because the operator simply "didn't understand" how the instrument should have been set up or didn't understand the accuracy limitations of the data obtained.

Due to the large number of vibration frequency analyzers on the market today, it would be impossible to cover the detailed features, setup and operation of every individual instrument and predictive maintenance computer software program currently available. However, all vibration frequency analyzers and predictive maintenance data collectors have certain things in common in terms of how vibration data is obtained, processed and displayed; and it is most

important that the vibration technician understands these concepts.

Figure 3-21: This digital vibration meter has only one button making it extremely simple to use.

3.11.1 THE VIBRATION TRANSDUCER

Regardless of the vibration instrument being used, the "heart" of every instrument is the vibration transducer. This is the device that is held or attached to the machine to convert the machine's mechanical vibration into an electrical signal that can be processed by the associated instrument into measurable characteristics of vibration amplitude, frequency and phase. Many different varieties of vibration transducers have been used over the years. However, with few exceptions, the transducer provided as standard with nearly all present-day vibration meters, analyzers and data collectors is the vibration accelerometer.

An accelerometer is a self-generating device that produces a voltage output proportional to vibration acceleration (G's). The amount of voltage generated per unit of vibration acceleration (G) is called the sensitivity of the accelerometer and is normally expressed in millivolts-per-G (mv/G), where 1 millivolt equals one-thousandth of a volt (1 mv = 0.001 volt). Accelerometers are available with sensitivities ranging from less than 1 mv/G to 10,000 mv/G; however, most accelerometers for general-purpose vibration detection and analysis applications will have sensitivities ranging from 10 to 100 mv/G. The significance of accelerometer sensitivity will be covered later.

3.12 THEORY OF OPERATION

Figure 3-22 shows a simplified diagram of typical accelerometer construction. The component of the accelerometer generates an electrical signal is called a “piezoelectric” element. A piezoelectric material is a non-conducting crystal that generates an electrical charge when mechanically stressed or "squeezed". The greater the applied stress or force, greater the generated electrical charge.

Many natural and man-made crystals have piezoelectric properties. There are also a number of

ceramic (polycrystalline) materials, which can be given piezoelectric properties by the addition of certain impurities and by suitable processing. These are called "Ferro-electric" materials. Most commercially available accelerometers used today incorporate Ferro-electric materials because they can be fabricated in a variety of shapes and their piezoelectric properties can be controlled more easily than crystals to suit many applications.

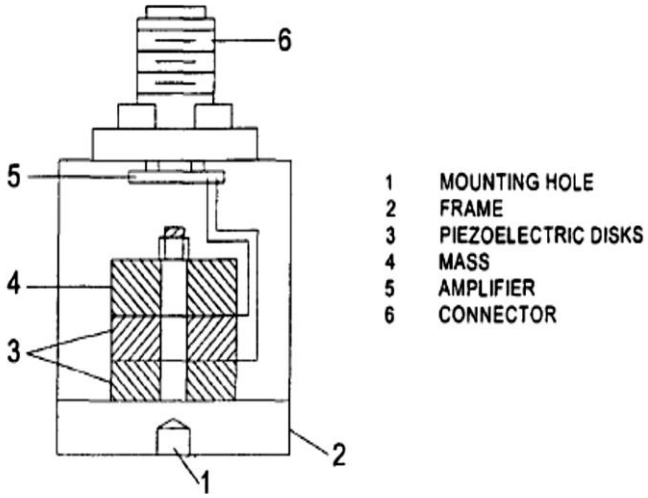

Figure 3-22: Basic accelerometer construction

Referring to the diagram in Figure 3-22, the accelerometer consists of a mass (usually a stainless steel disk) compressed against a "stack" of piezoelectric disks. The size and number of piezoelectric disks used in an accelerometer determines not only its sensitivity (mv/G), but its usable frequency range as well. When the accelerometer is held or attached to a vibrating object, the piezoelectric elements will be subjected to resultant "inertia" forces of the mass. Thus, a force proportional to the vibration acceleration is applied to the piezoelectric elements, resulting in an electrical charge signal proportional to vibration acceleration.

The operation of an accelerometer used for measuring and analyzing machinery vibration is exactly the same as that of a ceramic cartridge used on phonographs and record players, where the vibration of a phonograph needle riding in the grooves of a record is converted to an equivalent electrical signal.

Understandably, the amount of electrical signal generated by the piezoelectric element is relatively small and many times must be transmitted by an interconnecting cable to the vibration instrument or analyzer, which may be some distance away. For this reason, a common practice is to incorporate an electronic amplifier directly inside the accelerometer to amplify the signal so it can be transmitted through long cables without worrying about signal loss or interference from radio frequencies (RF interference) or high voltage electro-static interference from high voltage transformers, electrical fields around motors, etc. Accelerometers with built-in amplifiers can normally be used with interconnecting cables up to 1000 feet (330 meters) in length without appreciable signal loss or interference.

3.13 WHAT ABOUT DISPLACEMENT AND VELOCITY MEASUREMENTS?

Although the vibration accelerometer generates an electrical signal proportional to vibration acceleration (g's), this signal can be easily converted to the other parameters of vibration amplitude-velocity and displacement. This conversion from acceleration (G's) signal to

velocity or displacement readout is performed electronically by the associated vibration meter or analyzer. Converting the acceleration signal to velocity is called "single integration", and converting the acceleration signal to displacement is called "double integration".

3.14 ACCELEROMETER FREQUENCY RANGE

A main concern for anyone involved in a predictive maintenance program involving vibration detection and analysis is whether or not their vibration instrumentation is capable of detecting all the problem-related vibration frequencies that can be generated by their machines. Of course, the specified frequency range of the vibration meter, data collector or vibration analyzer is one consideration. However, the "usable" frequency range of the accelerometer transducer is another important consideration. The vibration meter, data collector or vibration analyzer may be capable of measuring vibration frequencies up to several million cycles per minute (CPM) or several thousand Hz. On the other hand, the accelerometer being used with the vibration instrument may have a much smaller range of vibration frequencies over which it can be used.

Accelerometers are generally classified as:

1. Low frequency accelerometers
2. General-purpose accelerometers
3. High frequency accelerometers
4. Permanently mounted accelerometers

The chart in Figure 3-23 outlines the typical physical and operational specifications for each of the four classes of accelerometers.

TYPICAL SPECIFICATIONS	ACCELEROMETERS			
	GENERAL PURPOSE	LOW FREQUENCY	HIGH FREQUENCY	PERMANENTLY MOUNTED
TYPICAL SENSITIVITY RANGE (m V/g Unless Noted)	10-100	500-10,000	0.4-20	10--100
TYPICAL MEASUREMENT FREQUENCY RANGE(CPM)	120-600,000	6-60,000	600-3,600,000	60-600,000
TYPICAL STUD MOUNTED NATURAL FREQUENCIES (CPM)	960,000 2 700,000 '	390,000 2,100,000	4,200,000 10,800,000	1,080,000 1,800,000
TYPICAL WEIGHT RANGE (grams)	17-110	135-1,000	1.2-15	60-180
TYPICAL USABLE TEMPERATURE RANGE (^{0}F)	(-100^0)-250^0	(−100^0)-250^0	(-40^0)-350^0	(-50^0)-250^0

Figure 3-23: Typical acceleration characteristics

3.14.1 GENERAL PURPOSE ACCELEROMETERS

Note from the chart in Figure 3-23 that "general purpose" accelerometers will normally accommodate vibration frequencies ranging from 120 CPM (2 Hz) to 600,000 CPM (10K Hz). Of course, these specifications are "typical" and will vary depending on the specific accelerometer manufacturer and model number.

Unless specified otherwise, most portable vibration meters, data collectors and analyzers are supplied with general-purpose accelerometers, which will, in fact, cover the vast majority of vibration detection and analysis requirements.

3.14.2 PERMANENTLY MOUNTED ACCELEROMETERS

Permanently mounted accelerometers such as the IRD Models 941 B and 942 are basically general purpose accelerometers designed for low-cost installation including clamp mounting or adhesive mounting.

3.14.3 LOW FREQUENCY ACCELEROMETERS

General-purpose accelerometers cover a fairly wide range of problem-related vibration frequencies and are probably suitable for the vast majority of machinery vibration detection and analysis applications. However, there are problems that can result in vibration frequencies well below the range of general-purpose accelerometers. For example, machines such as extruders, mine hoists, mixers and agitators often operate at speeds well below 100 RPM. In addition, on paper machines, various rolls may have operating speeds well below 100 RPM, with felt speeds below 20 RPM. For these applications, a low frequency accelerometer is required.

According to the chart, Figure 3-23, low frequency accelerometers can detect vibration frequencies as low as 6 CPM (0.1 Hz). However, remember that this is "typical" of low frequency accelerometers currently available and may vary depending on the specific accelerometer manufacturer and model number. Be sure to check the accelerometer manufacturer's specifications for the exact recommended usable frequency range.

Although low frequency accelerometers are designed to detect very low vibration frequencies, it can be seen from the chart in Figure 3-23 that low frequency accelerometers can also be used for fairly high frequencies as well, typically up to 60,000 CPM (1000 Hz). While this usable frequency range covers many of the normal vibration problems encountered on general machines such as motors, pumps, fans, generators, etc., it is suggested that low frequency accelerometers not be used for general-purpose applications. In order to accurately detect very low frequencies of vibration without interference from other "noise" sources such as radio frequencies (RF interference) or high voltage electro- magnetic induction, low frequency accelerometers must have high sensitivities. In other words, they must generate high levels of electrical signals when subjected to vibration. From the chart in Figure 3-23, it can be seen that low frequency accelerometers can typically have sensitivities up to 10,000 my/G. Although such high sensitivities are needed for successful low frequency vibration measurement, this also makes the accelerometer susceptible to damage if dropped or handled roughly. Simply dropping a low frequency accelerometer with high sensitivity can result in damage to the built-in amplifier. Low frequency accelerometers must be handled with extreme care to avoid damage.

3.14.4 HIGH FREQUENCY ACCELEROMETERS

Some machinery problems can generate vibration frequencies well above the usable range of general-purpose accelerometers. For example, Figure 3-24 shows a high-speed, multi-stage, gear-driven centrifugal compressor. In this case, the fundamental gear-mesh frequency can be calculated by taking the number of teeth on the bull gear (344 teeth) and multiplying this times the RPM of the bull gear (3,580 RPM). The result is a gear-mesh frequency of 1,231,680 CPM (20,528 Hz). (344 teeth x 3,580 RPM = 1,231,680 CPM). Obviously, this vibration frequency is well above the usable frequency range of a general purpose accelerometer. In addition, many gear-related problems generate predominant vibration frequencies, which are multiples, or "harmonics" of gear mesh frequency. Gear wear, for example, may generate a pre-dominate vibration frequency at two or three times the fundamental gear-mesh frequency. For this reason, when attempting to detect or analyze gear problems, it is recommended that the vibration instrumentation be capable of measuring vibration frequencies well above 3 times the fundamental gear mesh frequency. In many cases, this will require the use of a high frequency accelerometer.

3.15 IMPORTANCE OF ACCELEROMETER MOUNTING

Regardless of the usable frequency range of an accelerometer, whether or not high frequencies of vibration can be detected depends entirely on how the accelerometer is mounted. Figure 3-25 illustrates the four most common methods of mounting or applying an accelerometer to the machine for taking readings. Typical usable frequency ranges for each mounting technique is summarized in the chart, Figure 3-24.

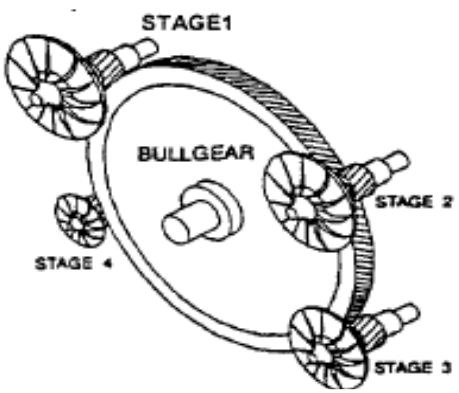

COMPONENT	#TEETH	RPM	Hz
Stage 4	25T	49,270	821.13
Stage 3	27T	45,620	760.30
Stage 2	32T	38,490	641.51
Stage 1	42T	29,325	488.75
Bull gear	344T	3,580	59.68

GMF= Bull gear Teeth x Bull gear RPM= Stage 1 Teeth x Stage 1 RPM

GMF= 344Teath x 3580 RPM = 42Teath x 29, 325 RPM

GMF= 1,231,680 CPM = 20,528 Hz

Figure 3-24. With a fundamental gear-mesh frequency over 1.2 million CPM, a high frequency accelerometer would be needed to monitor and analyze this compressor.

3.15.1 STUD MOUNTING

The best way to mount an accelerometer is stud mounting. This will provide the maximum usable frequency range, and is especially recommended for high frequency accelerometers. For best results, the machine surface should be flat, smooth and free of paint or dirt. For maximum bonding, a layer of silicone grease should be applied to fill the tiny imperfections between the mating surfaces. Also, make certain that the threaded stud is not too long. If the stud is too long and bottoms in the tapped hole in the accelerometer housing, the usable frequency range will be greatly reduced. Finally, be sure that the accelerometer is not loose. A tightening torque of approximately 30 to 50 inch-pounds is usually sufficient. Over tightening can distort and damage the accelerometer.

3.15.2 ADHESIVE MOUNTING

Although not as good as stud mounting, adhesive mounting provides very good frequency response as can be seen in the chart, Figure 3-25. Here also, the machine surface must be flat, smooth and clean to insure secure bonding. The layer of adhesive should be kept as thin as possible to provide maximum frequency response. A thick layer of adhesive will add damping and reduce the maximum frequency response

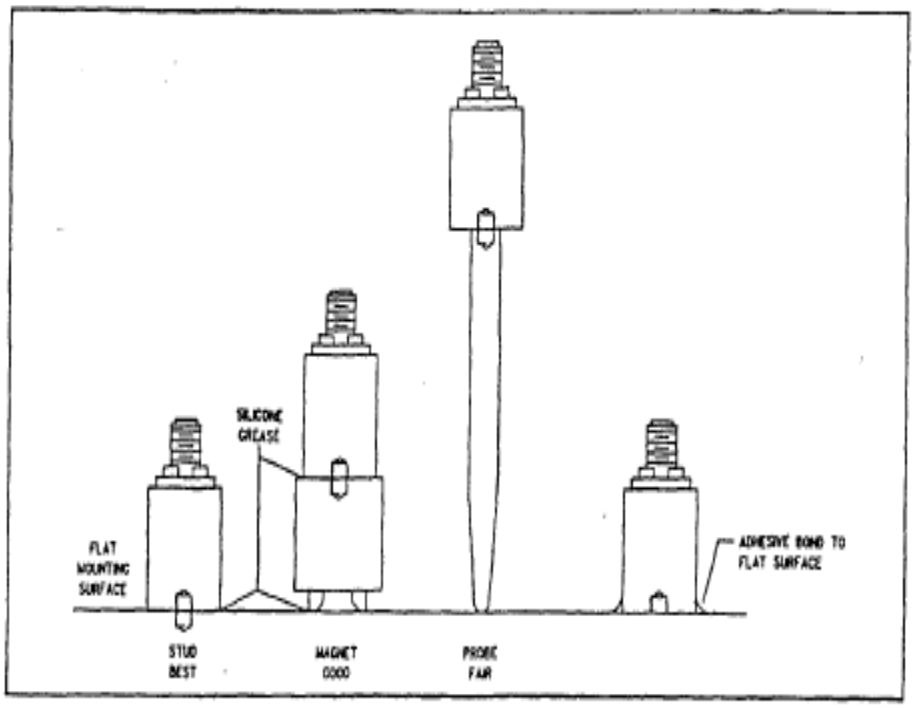

Figure 3-25: Accelerometer mounting methods.

3.15.3 MAGNETIC HOLDER

While stud mounting and adhesive bonding provide excellent frequency response, these accelerometer mounting methods may not be practical for taking routine periodic vibration checks, due to the large number of machines and measurement points that may be involved in a predictive maintenance program. Where stud or adhesive mounting is not practical, the use of a magnetic holder is the next preferred mounting method.

For maximum frequency response, a layer of silicone grease should be applied between the surface of the accelerometer and magnet. Of course, the surfaces of the machine and magnet should be clean and free of paint. If the poles or surface of the magnet has been nicked due to rough handling or by being dropped, the nicks should be carefully removed to insure solid

mounting.

When using 2-pole magnet on irregular or rounded surfaces, make sure that the magnet is not "rocking" on the machine surface. If the magnet is rocking, this will not only reduce the maximum frequency range, but may also introduce vibration frequency characteristics indicating looseness.

Transducer mounts usable frequency range for the WILCOXON 726 T

Accelerometer Mounting	Maximum Acceptable Frequency (CPM)	Mounting Natural Frequency (CPM)
1) Stud Mount	975,000	1,900,000
2) Adhesive Mount with Hottinqer Baldwin Messtechnik X60	540,000	None Observed
3) Stud Mount on Rare Earth Magnet	450,000	724,500
4) Mounted on Quick Connect Stud Mount	360,000	609,000
5) Hand-held Mount using 2" probe	48,000	88,500

Figure 3-26. Typical recommended maximum frequency ranges for accelerometer mounting

EXTENSION PROBE

By far, the worse way to take vibration readings is with the use of an extension probe. Studies have shown that extension probes tend to act like mechanical "filters", and essentially eliminate vibration frequencies above approximately 60,000 CPM (1,000 Hz). This is verified by the chart, Figure 3-26, that shows 48,000 CPM (800 Hz) to be the maximum usable frequency range for extension probes. Studies have been carried out on various probe materials such as aluminum and stainless steel as well as various probe lengths, from as short as 1/4-inch to several inches long. The results revealed very little difference in frequency response.

Because of their very limited frequency response, extension probes should be used ONLY when no other accelerometer mounting method can be used. It must be remembered, however, that when an extension probe is used, important high frequencies of vibration above 60,000 CPM (1,000 Hz) due to problems such as defective rolling-element bearings and gears, will go undetected.

PROBE RESONANCE

Another problem associated with taking vibration readings with an extension probe, is the resonant frequency of the probe. Every object has a "natural" frequency, which is determined by its mass and stiffness characteristics. Common examples of natural frequencies are the vibration frequencies of a bell or tuning fork when struck. Striking a bell causes it to vibrate at its natural frequency.

Unfortunately, most extension probes have natural frequencies within the range of many common problem-related machinery vibration frequencies. As a result, the natural frequency of the probe is being "excited" into resonance, which greatly amplifies the true vibration.

It must be remembered that the extension probe does not actually cause or generate vibration. However, the amplitude of any existing vibration that occurs at or near the natural frequency of the probe will be significantly amplified by probe resonance.

Probe resonant frequencies typically occur within a frequency range of approximately 40,000 CPM to 60,000 CPM (667 Hz to 1000 Hz), depending on probe material and length. Of course, there are many common mechanical problems that can generate vibration frequencies within this range, such as faulty rolling-element bearings. However, amplification due to probe resonance may make the problem appear more serious than it really is. If there is any doubt about the vibration being real or the result of probe resonance, a quick comparison check with a magnetic holder will usually provide the answer.

3.16 WHERE TO TAKE THE READINGS

Since vibratory forces generated by the rotating components of a machine are passed through the bearings, vibration readings for both detection and analysis should be taken directly on the bearings whenever possible.

Figure 3-27 shows the layout of a typical machine and illustrates where vibration readings should be taken and where readings should not be taken. Ideally, vibration readings taken in the horizontal and vertical directions should be taken directly on or as close as possible to the bearings with the accelerometer pointing toward the centerline of the shaft. Axial vibration readings should be taken on the bearing as close to the shaft as possible, but without compromising personal safety

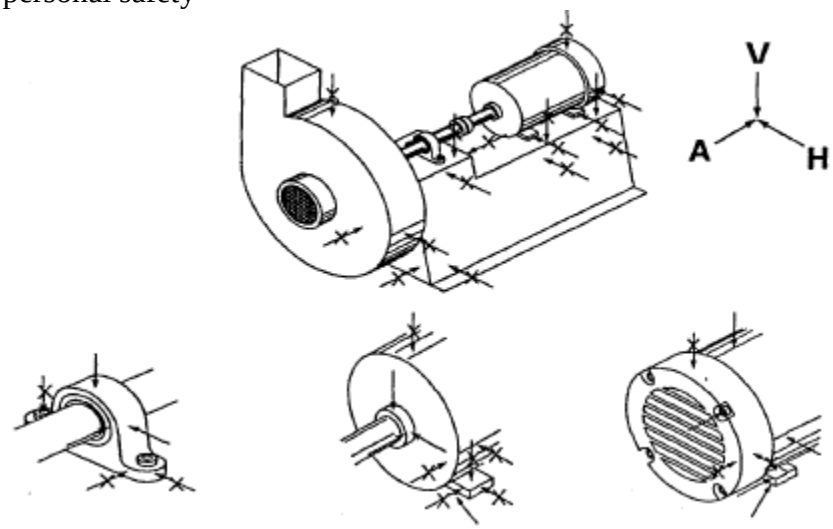

Figure 3- 27: Good and poor *locations* for taking *vibration* measurements

Vibration measurements should not be taken on thin structural members such as fan housings, ductwork or thin steel panels to evaluate machinery condition. These components, because of their flexibility, may reveal very high amplitudes of vibration, even though the machine itself is in satisfactory operating condition.

Many small to medium sized motors will have a thin cast or steel shroud to guard the cooling fan, as illustrated in Figure 3-27. Vibration readings should not be taken on this guard. Radial (horizontal and vertical) measurements should be taken directly on the rigid motor frame, as close to the outboard bearing as possible. Axial readings can be taken on one of the bolts securing the fan shroud to the motor frame. As an alternative, axial reading may be taken at the motor feet, however, it should be noted that these readings would normally be considerably

lower in amplitude than those taken at the bearings.

Although it is recommended that vibration measurements are taken directly on the bearings of the machine, many times the configuration of the machine dictates where readings can be taken. And many times, where readings can be taken is considerably less than ideal. In any case, the KEY to a successful predictive maintenance program is consistence. Measurement locations should be permanently marked so that periodic readings can be taken at the same location each and every time. Even though some of these measurement locations may not be ideal places to take data, if a significant increase in vibration is detected, a developing problem is probably the reason, and a detailed analysis should be carried out to determine the cause.

3.17 VIBRATION FREQUENCY ANALYZERS

Whenever a machine exhibits excessive vibration or a significant increase in vibration has been detected through periodic checks, the next step is to perform a complete analysis of the vibration to determine the cause. A KEY element for any vibration analysis is determining the vibration frequencies present and how these vibration frequencies relate to the rotating speed (RPM) of the various machine components. To do this, of course, requires a **vibration frequency analyzer.**

Vibration frequency analyzers are available in a wide range of features and capabilities, and no attempt is made here to cover all available instruments. However, all frequency analyzers have certain common features and characteristics in terms of how the data is processed and presented, and it is most important for vibration technicians to know and understand the basics of how their instruments work as well as their limitations. As mentioned previously, many vibration problems have been incorrectly diagnosed or missed completely, simply because the vibration analyst didn't understand the workings of the vibration frequency analyzer.

All vibration frequency analyzers currently available can be categorized as either:

1. Analog or "swept-filter" frequency analyzers

   Or

2. Digital or "FFT' frequency analyzers

Each type of vibration frequency analyzer is described in the sections to follow.

3.17.1 ANALOG (SWEPT-FILTER) FREQUENCY ANALYZERS

Introduced in the 1950's, analog or swept-filter frequency analyzers were the very earliest instruments available for performing vibration analysis. A swept-filter analyzer works in much the same way as a radio. In almost any community, there are literally dozens of radio stations broadcasting programs simultaneously. However, each station is broadcasting on its own assigned broadcast frequency. Of course, a radio has a "tuner" that allows you to tune to a specific broadcast frequency so that you can listen to that particular station. The tuner is actually an electronic filter that accepts the broadcast frequency of the desired station while ignoring or rejecting all the others.

A swept-filter vibration frequency analyzer works on exactly the same principle as a radio. A machine may generate (broadcast) many different frequencies of vibration simultaneously, depending on the rotating speeds of the various machine components, the specific problems causing vibration, etc. The swept-filter vibration analyzer includes a filter (tuner) that one can

tune or "sweep" over a frequency range of interest to pick out or identify each generated frequency of vibration. The only differences between a radio and a swept-filter vibration frequency analyzer are:

1. The filter of a swept-filter vibration analyzer is designed to respond to machinery vibration frequencies and not radio frequencies.
2. The swept-filter vibration analyzer uses a transducer such as an accelerometer attached to the machine to pick up the signal; a radio uses an antenna to pick up the broadcast radio (RF) frequencies.
3. The swept-filter vibration analyzer presents the measured vibration amplitude and frequency data on meters or as a hard-copy printout of amplitude vs. Frequency (usually called a vibration spectrum or signature); a radio presents in data as sound through speakers.

Figure 3-27B shows atypical, present-day swept-filter vibration analyzer. The instrument includes a filter dial that can be manually tuned (like a radio) over a wide range of vibration frequencies to identify the amplitudes and frequencies of machinery vibration. Selector switches are provided for selecting the desired parameter of vibration amplitude (displacement, velocity acceleration), full-scale amplitude range and filter "bandwidth" characteristics. Meters are included to display the amplitude and frequency information. A stroboscopic (strobe) light is also included for phase analysis, dynamic balancing, frequency confirmation and "slow motion" studies.

This particular instrument also incorporates a built-in printer for generating hardcopy data. By simply pushing a button, the analyzer filter automatically sweeps over the frequency range of interest while the printer generates a plot of the amplitude-versus-frequency data. This enhancement to swept-filter analyzers eliminates the tedious and time consuming task of manually tuning to each vibration frequency of interest and manually "logging" the information on a data sheet, as was the practice with the first swept-filter vibration analyzers

Figure 3-27B: A typical present-day swept-filter analyzer.

3.17.2 DIGITAL (FFT) FREQUENCY ANALYZERS

Analog, swept-filter frequency analyzers have been in use for many years and have been used to detect, identify and solve many machinery problems. However, they have several disadvantages over modern digital (FFT) frequency analyzers, including:

1. Analog analyzers are typically bulky and heavy, with weights generally ranging from 20 to 40 pounds. By comparison, some digital analyzers weight less than 5 pounds.
2. Analog analyzer cannot store or interface with computer-based predictive maintenance

software programs. Digital analyzers can store vibration data from literally hundreds of machines.

3. The features and capabilities of instruments are generally governed during initial design. Upgrades or adding features normally requires hardware changes. By comparison, digital analyzers are essentially computers in themselves and enhancements can be made or features added by simply changing the operating software.
4. Analog analyzers are somewhat limited in frequency accuracy and the ability to separate close vibration frequencies. With the proper setup, digital analyzers can measure vibration frequencies down to fractions of a CPM.
5. Analog analyzers are typically limited to a maximum frequency of 600, 000 CPM (10k HZ), whereas some digital analyzers can measure frequencies to several million CPM.
6. Analog analyzers are slower than digital analyzers. An analog analyzer may take from 30 seconds to several minutes to print a frequency spectrum. Digital analyzers can perform this task in a fraction of the time.

These are only few advantages of the digital vibration analyzers, including vibration data collectors, have over analog instruments. However, it should be apparent that digital analyzers are superior in so many respects, and that is why, beginning in the early 1980's, they have essentially "taken over" the field of vibration analysis. However, with their added power and features, digital analyzers also require the operator to make more critical decisions in setup to insure that all important data is presented, and presented in a way that makes it possible to identify specific problems.

3.18 WHAT IS FFT?

The term "FFT" stands for "Fast Fourier Transform". Nearly 200 years ago, French mathematician, Baron Jean Baptiste Joseph Fourier established that any periodic function (which includes machinery vibration signals) can be represented mathematically as a series of sines and cosines. In other words, it is possible to take a vibration time wave form, whether the simple or complex, and mathematically calculate the vibration frequencies present along with their amplitudes. The process is called "Fourier Transform". Although a Fourier Transform can be done manually, the process is extremely time-consuming. However, with the introduction the digital technology, the process can be carried out very fast, hence the term: Fast Fourier Transform or FFT. Digital vibration analyzers and data collectors actually include a computer chip programmed to perform the FFT function.

The following figure is a block diagram showing the main components incorporated in an FFT analyzer:

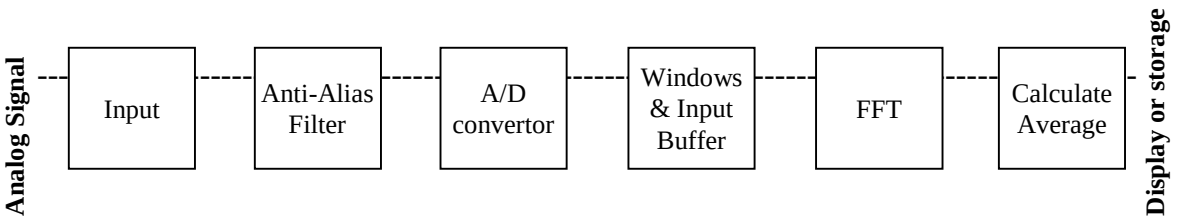

Figure 3-28: Block Diagram of FFT Analyzer

3.18.1 DEFINING FFT SPECTRAL PARAMETERS

Anytime an FFT is to be taken, whether for a detailed analysis or for routine predictive maintenance checks, it is necessary to define or specify the FFT spectral parameters. These

parameters include:

1. **Amplitude units:** displacement, velocity or acceleration
2. **F_{max}:** the range of vibration frequencies to be analyzed
3. **Frequency units:** CPM or Hz
4. **Number of lines of resolution:** the accuracy of displayed vibration frequencies.
5. **Number of spectral averages:** how many FFT's are taken and amplitude averaged to minimize random and transient events.

The choice of selecting vibration displacement, velocity or acceleration for measurement, based on the vibration frequencies anticipated, as well as the selection of frequency units (CPM versus Hz) has already been covered in detail in Chapter II. However, the choice of F_{max} along with the number of lines of resolution and the number of spectral averages have not been covered and are discussed in the sections to follow.

3.18.2 SELECTING FMAX

The first and perhaps most important decision that must be made in obtaining an FFT is the F_{max} or maximum range of frequencies that will be analyzed and displayed. Of course, the selected F_{max} must be high enough to include all significant, problem-related frequencies; however, the higher the F_{max}, the lower the accuracy of measured frequencies. Therefore, the F_{max} selected should be no higher than needed to detect problem related vibration frequencies.

Figure 3-29 shows a comparison of FFT's taken on a 1740-RPM motor driving a reciprocating compressor. One FFT was taken with an F_{max} of 0-600,000 CPM, and shows only two vibration peaks on the far left side of the frequency scale. The second FFT was taken with a much lower 0-24,000 CPM F_{max} and clearly shows that there are considerably more than two significant frequencies of vibration present.

Most FFT analyzers and data collectors provide a very wide range of F_{max} choices, typically ranging from 0-600 CPM up to several million CPM with numerous selections in between. While it would not be possible to provide exact guidelines for each and every type of machine to be analyzed, the following paragraphs offer some general guidelines.

3.18.3 MACHINES WITH ROLLING ELEMENT BEARINGS

When rolling-element bearings deteriorate, there are various stages that typically reveal the extent of deterioration. And, each stage can usually be detected by certain characteristic frequencies of vibration. Of course, in the early stages of bearing failure, a noticeable increase in SPIKE ENERGY (gSE) is usually the first indication. However, as bearing deterioration progresses and the flaws on the raceways or rolling elements begin to increase in size, the intensity of the impacts that occur between various bearing components increases also. These impacts serve to excite the "ringing" natural frequencies of the various bearing components, including the inner and outer raceways, bearing housing, cage (retainer) rolling elements, etc. This is similar to the way that striking a bell causes it vibrate or ring at its natural frequency.

The bearing component natural frequencies generally occur within a frequency range from approximately 30,000 CPM (500 Hz) to 120,000 CPM (2K Hz) although some may appear at slightly higher or lower frequencies, In any case, where the detection and analysis of rolling element bearings is of concern, an F_{max} on the order of 0-120,000 CPM (0-2K Hz) is normally recommended.

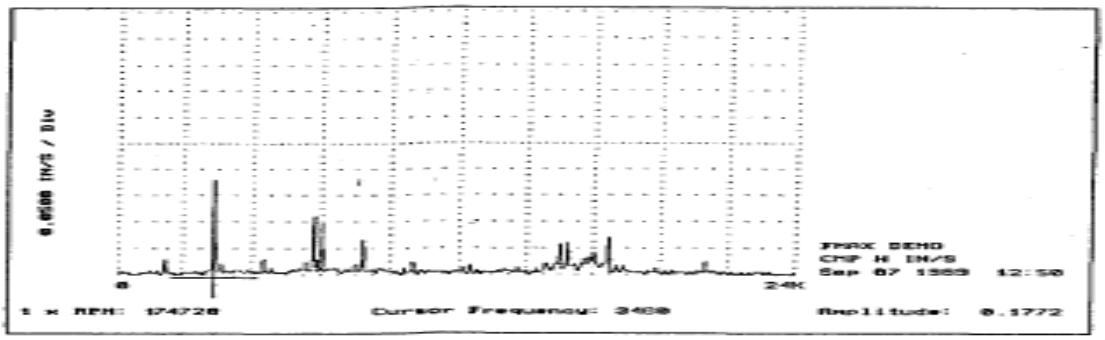

005% x 0.500 = 0.0250 1 x RPM: 174720.00

Machine	Pos	Dir	Units	Date
FMAX DEMO	CMP	H	IN/S	Sep 07 1989 12:52

Frequency	1 x RPM	Amplitude
7500	0.043	0.2433
16500	0.094	0.1161

T – Threshold adjust Q – Quit

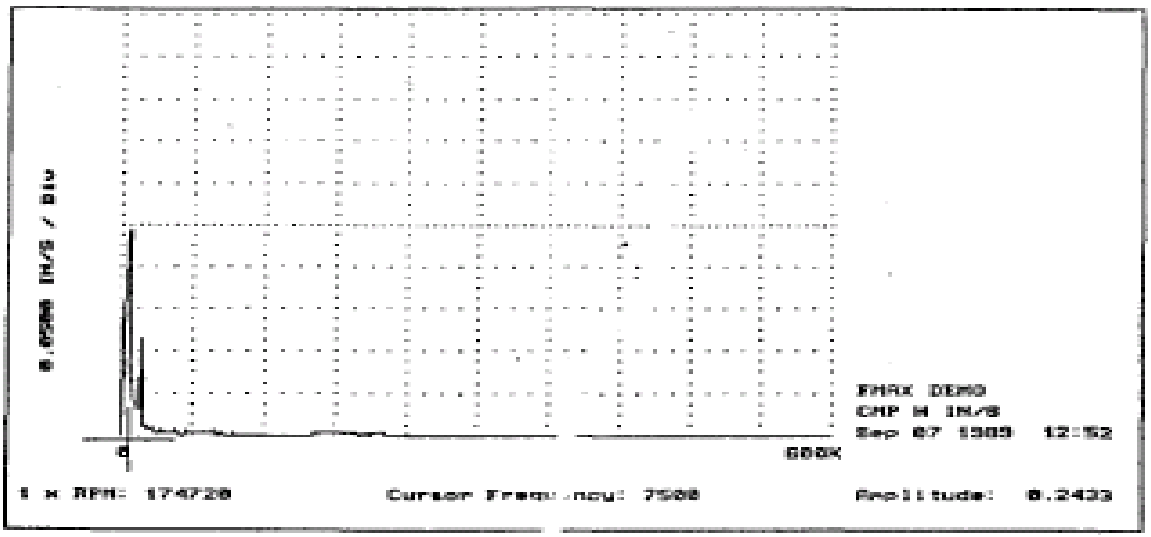

005% x 0.500 = 0.0250 1 x RPM: 174720.00

Machine	Pos	Dir	Units	Date
FMAX DEMO	CMP	H	IN/S	Sep 07 1989 12:50

Frequency	1 x RPM	Amplitude
1740	0.0100	0.0289
3480	0.0199	0.1772
5220	0.0299	0.0289
6960	0.0398	0.1099
7200	0.0412	0.0975
8640	0.0495	0.0658
1560[illegible]	0.0893	0.0566
158[illegible]	0.0907	0.0582
164[illegible]	0.0941	0.0292
166[illegible]	0.0955	0.0327
160[illegible]	0.0962	0.0399
1734[illegible]	0.0992	0.0681

T – Threshold adjust Q – Quit

Figure 3-29: A comparison of FFT's with high and low Fmax

3.18.4 SLEEVE BEARING MACHINES

Sleeve or plain bearing machines, such as large motors and fans, rarely have problem-related vibration frequencies as high as those that can be found on rolling element bearing machines, unless there is some other feature of the machine such as a high number of fan blades or

impeller vanes that could result in high aerodynamic or hydraulic pulsation frequencies. As a result, the F_{max} for sleeve bearing machines is normally set at approximately 10 x RPM. Thus, for a sleeve bearing fan operating at 1800 RPM, an F_{max} of 18,000 CPM (10 x 1800 = 18,000) would be considered adequate in most cases. Again, if the calculated blade or vane-passing frequencies are higher than 10 x RPM, then this should be the governing factor. However, rarely is it necessary to exceed 60,000 CPM on general machines with sleeve type bearings.

3.18.5 MACHINE WITH GEAR DRIVES

Obviously, a main concern with machines that include gears and gear drives is the detection and analysis of gear problems. However, experience has revealed that many gear problems will result in vibration frequencies, which may be 2X, and in some cases 3X the fundamental gear-mesh frequency. For this reason, the recommended practice is to set the F_{max} for gear analysis to a minimum of 3.25 x gear-mesh frequency.

In the case of multiple gear increasers or reducers, it may be necessary to use more than one F_{max} to accommodate more than one gear-mesh frequency. For example, the gearbox in Figure 3-30 is a multiple gear increaser with two different gear-mesh frequencies. The gear-mesh frequency of the low speed input gear with the intermediate gear is 59,000 CPM (1180 RPM x 50 teeth = 59,000 CPM). Therefore, the F_{max} for this gear frequency would be 191,750 CPM (59,000 x 3.25 = 191,750 CPM). However, an F_{max} of 191,750 CPM is not an available F_{max} choice with most FFT analyzers or data collectors. Therefore, an F_{max} of 200,000 CPM, a common F_{max} choice, would be selected.

The second gear-mesh frequency for the gearbox in Figure 3-30 is the frequency between the intermediate gear and the high-speed output shaft. This frequency is considerably higher at 159,300 CPM (5310 RPM x 30 teeth = 159,300 CPM). Therefore, the recommended F_{max} for this gear frequency would be 517,725 CPM (159,300 x 3.25 = 517,725 CPM). Here also, a frequency of 517,725 CPM is probably not one of the F_{max} choices available, so an F_{max} of 540,000 CPM would likely be selected.

As can be seen in the above example, it may, in some cases, be necessary to use more than one F_{max} to carry out an effective predictive maintenance program or a detailed analysis due to the wide range of problem related vibration frequencies anticipated. In addition, it must be pointed out that the F_{max} selected for analyzing the various gear frequencies are in addition to the F_{max} needed to properly analyze the drive motor and compressor. Since the motor in this case has rolling element bearings, an F_{max} of around 120,000 CPM should be used on the motor and low speed side of the adjacent gear box to deal with possible problems aside from gear problems, including unbalance, misalignment, looseness, bearing deterioration, etc. Since the compressor has sleeve bearings, an F_{max} of approximately 10 x RPM would normally be used for its analysis. However, because the impellers on this compressor have 15 vanes, an F_{max} slightly over 79,650 CPM (5310 RPM x 15 vanes = 79,650 CPM) would be needed for its analysis.

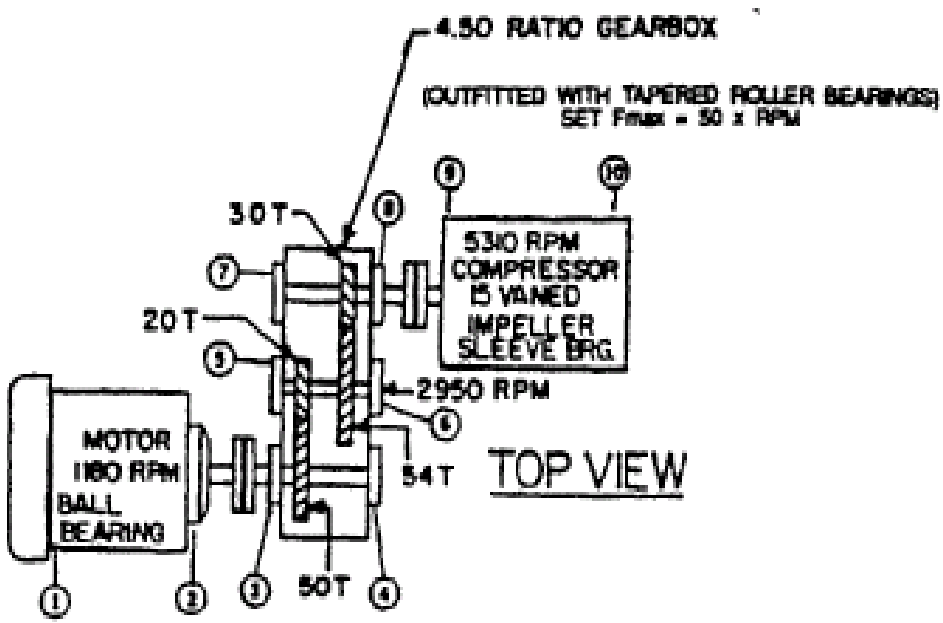

Figure 3-30: Frequency analyses using more than one F_{max} on this motor, gearbox and compressor train would be needed due to the wide range of potential problem-related frequencies.

GMFI = (50T)(1180RPM) = (20T)(2950RPM)

GMF1 = 59,000 CPM

POS 3H1 F_{max}=GMF x 3.25 =191,750 CPM

USE POS 3H1 F_{max} =200,000 CPM

GMF2 = 54T x 2950 RPM = (30T x 5310 RPM)

GMF2 = 159,300 CPM

POS. 6H1 $F_{max=}$ 3.25 x 159,300 = 517,725 CPM

USE POS 6HI F_{max} = 540.000 CPM

(Must Measure Acceleration Here)

From the above example, it can be seen that selecting the appropriate F_{max} for analysis is extremely important and must be given extensive consideration based on the anticipated problem-related vibration frequencies. Some would argue that the F_{max} needed to accommodate the highest gear-mesh frequency (540,000 CPM) is all that is needed for the entire machine. However, it must be remembered that the higher the F_{max}, the lower the accuracy of measured frequencies. Although the high F_{max} of 540,000 CPM is needed to detect and identify problems with the high speed gears, this high F_{max} does not provide the accuracy needed to identify or separate other possible problems such as mechanical versus electrical problems with the drive motor. In fact, it will be shown later in this section that an additional F_{max} analysis will be required on the motor to distinguish between mechanical and electrical problems.

Other ways of determining the best F_{max} for a given application include:

1. Obtain and compare FFTs on several similar or identical machines using various F_{max} selections. Start with a fairly high F_{max} to see if any significant high frequencies are present. If no high frequencies are detected, choose an F_{max} that will accommodate the highest frequency found. However, if higher frequencies are possible, such as gear-

mesh or bearing frequencies, an F_{max} should be chosen to accommodate these potential problem-related frequencies, even though they may not be present at the time these comparisons are made.

2. Based on the vibration frequencies common for various machinery problems it is often possible to "anticipate" the highest problem-related frequency for a given machine. Of course, gears may have vibration frequencies in excess of 3 times the fundamental gear mesh frequency as discussed above. And, machines with rolling element bearings may have vibration frequencies in excess of 120,000 CPM due to bearing deterioration, regardless of RPM. With sleeve bearing machines, the highest frequencies are normally associated with aerodynamic or hydraulic pulsations where the fundamental frequencies are the product of the number of blades or vanes times RPM.

3.19 SELECTING THE NUMBER OF LINES OF RESOLUTION

The next important decision that must be made when taking an FFT is selecting the number of lines of resolution. This is similar to selecting the "broad" or "sharp" filter used in analog or swept-filter frequency analyzers. The decision will not only determine the accuracy of frequency data presented, but will also determine the amount of time required to perform the analysis as well as the amount of instrument and computer storage required to store the data.
Unlike swept-filter analyzers that may offer a choice of only two or three filter bandwidths, most FFT frequency analyzers and data collectors offer a much larger choice of lines of resolution. Typical FFT analyzers may offer 25, 50, 100, 200, 400, 800, 1600, 3200 and 6400 lines of resolution

Figure 3-31 illustrates the concept of lines of resolution. When the choice of F_{max} and lines of resolution has been made, the selected frequency range will then be divided into the selected number of lines. For example, assume that 400 lines of resolution were chosen for an FFT with an F_{max} of 120,000 CPM. This means that the entire frequency range from 0 to 120,000 CPM will be divided into 400 lines, sometimes called frequency "cells" or "bins".

The concept of "lines of resolution" can be compared to the swept filter of an analog frequency analyzer. Where the analog swept-filter analyzer has one filter that can be moved or tuned over the frequency range, the FFT analyzer uses many filters (lines) "stacked" side-by-side to cover the selected frequency range. In the example above, there would effectively be 400 individual filters, each with a certain frequency (CPM or Hz) width to cover the selected F_{max}. Each vibration frequency would then be placed within the line of resolution that included that particular frequency.

The significance of the number of lines of resolution selected is that it, along with the selected F_{max}, determines the accuracy or "resolution" of the frequency data presented in the FFT. To illustrate, in the example given above, an F_{max} of 120,000 CPM was chosen along with 400 lines of resolution. The frequency width of each line of resolution can be easily determined by simply dividing the F_{max} by the number of lines of resolution. In this case:

$$\text{Frequency Resolution} = \frac{F_{max}}{\text{Lines of Resolution}}$$

$$= \frac{120{,}000 \text{ CPM}}{400 \text{ Lines}}$$

$$= 300 \text{ CPM}$$

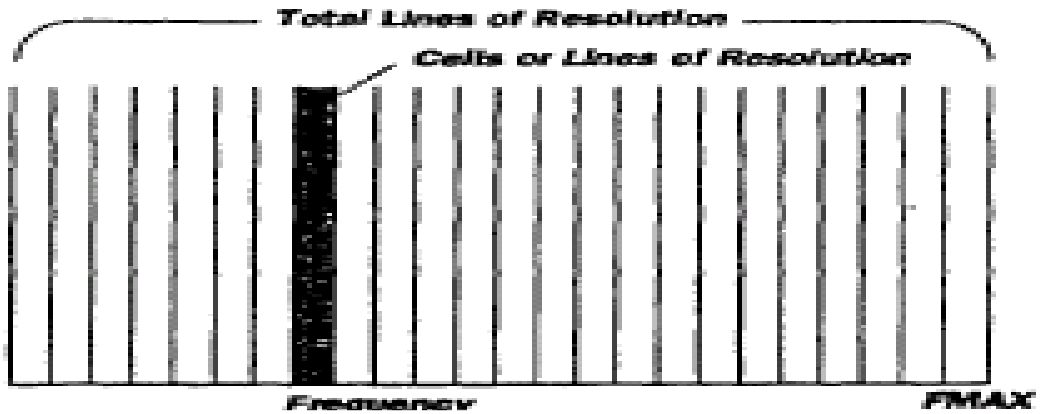

Fig 3-31 FFT Lines or Resolutions

In other words, in this example, each of the 400 lines of resolution would be 300 CPM wide. And, since each line of resolution is 300 CPM wide, it is quite possible that more than one vibration frequency could be present within a single line. However, on the FFT display it would appear as a single peak or as a single vibration frequency.

The importance of understanding the relationship between F_{max}, lines of resolution and frequency accuracy can best be illustrated by a practical example. Assume that a motor driving a pump is operating at 3550 RPM. Of course, mechanical problems such as unbalance, misalignment, looseness, etc., will result in vibration frequencies that are exactly 1 x and 2x RPM or 3550 CPM and 7100 CPM in this case. In addition, motors, such as this 2-pole induction motor, may also have "electrical" problems such as open or shorted windings, unequal air gap or broken rotor bars that cause vibration because of unbalanced magnetic forces between the motor armature and field (stator). These and other electrical problems will result in vibration frequencies that are exactly related to the AC electrical frequency powering the motor. In this case, since the motor is a 2-pole motor, the rotating speed of the magnetic field in the stator will be 1 x AC line frequency or exactly 3600 CPM (assuming AC line frequency is 60 Hz or 3600 CPM). In this case, it is possible to have mechanical and/or electrical problems, and the representative vibration frequencies are separated by only 50 CPM (3600 CPM-3550 CPM = 50 CPM). An FFT with an F_{max} of 120,000 CPM taken with 400 lines of resolution would not be able to distinguish between or separate these two problem-related frequencies since they would most likely fall within the same (300 CPM wide) line of resolution.

Many times misalignment will result in a vibration with a frequency of 2 x RPM. In the above example, this would be 7100 CPM (2 x 3550 RPM = 7100 CPM). However, 2 x AC line frequency or 7200 CPM is also a very common frequency caused by electrical problems, as will be explained further in Chapter V on Vibration Analysis of motors. Here, the difference between the mechanical frequency (7100 CPM) and the electrical frequency (7200 CPM) is only 100 CPM. These two problem-related frequencies could not be distinguished or separated where each line of FFT resolution is 300 CPM wide.

From the induction motor example given above, it should be apparent that close attention must be paid to the specific machine being analyzed and the possibility of problems that can cause very close vibration frequencies when selecting the FFT parameters of F_{max} and lines of resolution. In fact, because the electrical and mechanical vibration frequencies found on induction motors are so close, it is recommended that at least one additional FFT be taken on induction motors, using an F_{max} of 12,000 CPM, and using 3200 lines of resolution. Each line of resolution of this FFT will be slightly smaller than 4 CPM and this will clearly separate and individually display mechanical and electrical vibration frequencies.

3.20 UNDERSTANDING THE CURSOR FREQUENCY

Whenever an FFT is displayed, whether on the instrument screen or one that has been downloaded for recall and display on the CRT of the computer, a cursor is available that can be lined up with a specific peak of interest to determine the amplitude and frequency information. The cursor is moved to the vibration peak of interest using the right and left arrow keys on the instrument keypad or computer keyboard. In addition, nearly all systems provide for a tabular readout of the amplitude and frequency characteristics of the displayed spectrum to eliminate the need to manually run the cursor to each significant frequency peak and manually write down the amplitude and frequency information.

Figure 3-32 illustrates a typical FFT along with the tabular listing of the individual amplitude and frequency components displayed on the FFT. Note that the cursor in this example has been moved to the second highest peak from the left, and a "cursor" frequency of 3450 CPM has been displayed. The emphasis here should be placed on the word CURSOR frequency and not VIBRATION frequency, which is a common error made by beginning vibration analysts. In this particular example, the F_{max} selected is 60,000 CPM and the number of lines of resolution is 400 lines. Thus the frequency width or "resolution" of each line in this case is:

$$\text{Frequency Resolution} = \frac{F_{max}}{\text{Lines of Resolutions}} = \frac{60{,}000 \text{ CPM}}{400 \text{ Lines}} = 150 \text{ CPM}$$

Thus, in this example, each of the 400 lines of resolution is 150 CPM in width:

Whenever a cursor is moved to a vibration peak of interest on an FFT display, it must always be remembered that the cursor does not go to the exact frequency of vibration within the line of resolution. Instead, THE CURSOR GOES TO THE CENTER OF THE LINE OF RESOLUTION IN WHICH THE VIBRATION SIGNAL IS CONTAINED.

In the above example, the line of resolution in which the vibration signal was contained was 150 CPM in width, and the center of the particular line of resolution in which it was contained was 3450 CPM. The potential error in this case between the indicated cursor frequency and actual vibration frequency is plus or minus (+/-) 75 CPM. In other words, the actual vibration frequency could be as much as 75 CPM above or 75 CPM below the indicated cursor frequency. Therefore, the correct interpretation of this peak would be: **"There is a vibration signal within a line of resolution that is 150 CPM in width, the center of which is 3450 CPM".**

Many vibration analysts have error in thinking that the displayed cursor frequency is the exact vibration frequency and, as a result, there have been many problems diagnosed incorrectly simply because of a lack of understanding of the accuracy limitations of an FFT display based on the chosen F_{max} and lines of resolution.

SELECTING THE NUMBER OF SPECTRAL AVERAGES

As mentioned previously, when an FFT is performed, the instrument must first collect a sample of the analog vibration waveform called a "data set". This hopefully represents the true vibration behavior of the machine. Unfortunately, transient conditions can occur during the time the data is being collected, which do not represent the machine's actual vibration characteristics. For this reason, whenever FFTs are obtained for predictive maintenance or

analysis applications, the normal procedure is to collect and average the data from more than one data set. This is called "spectral averaging" and is done to minimize the influence of transient conditions such as bumping the machine, startup or shutdown of nearby machines and other sources that may "confuse" the analysis data. Figure 3-32 shows comparative FFTs taken on a motor direct coupled to a reciprocating compressor. One FFT was taken using a single data set or a "one sample average". The second FFT was taken using 64 data sets and averaging the frequency and amplitude characteristics from the 64 samples taken.

Considerable differences can be seen in the comparative data, not only in the amplitudes of certain frequencies, but the actual frequencies displayed. For example, in the FFT from the single sample, a significant vibration component can be seen at a frequency of approximately 5 x RPM. However, this frequency component is virtually nonexistent in the FFT displayed after averaging 64 samples of data.

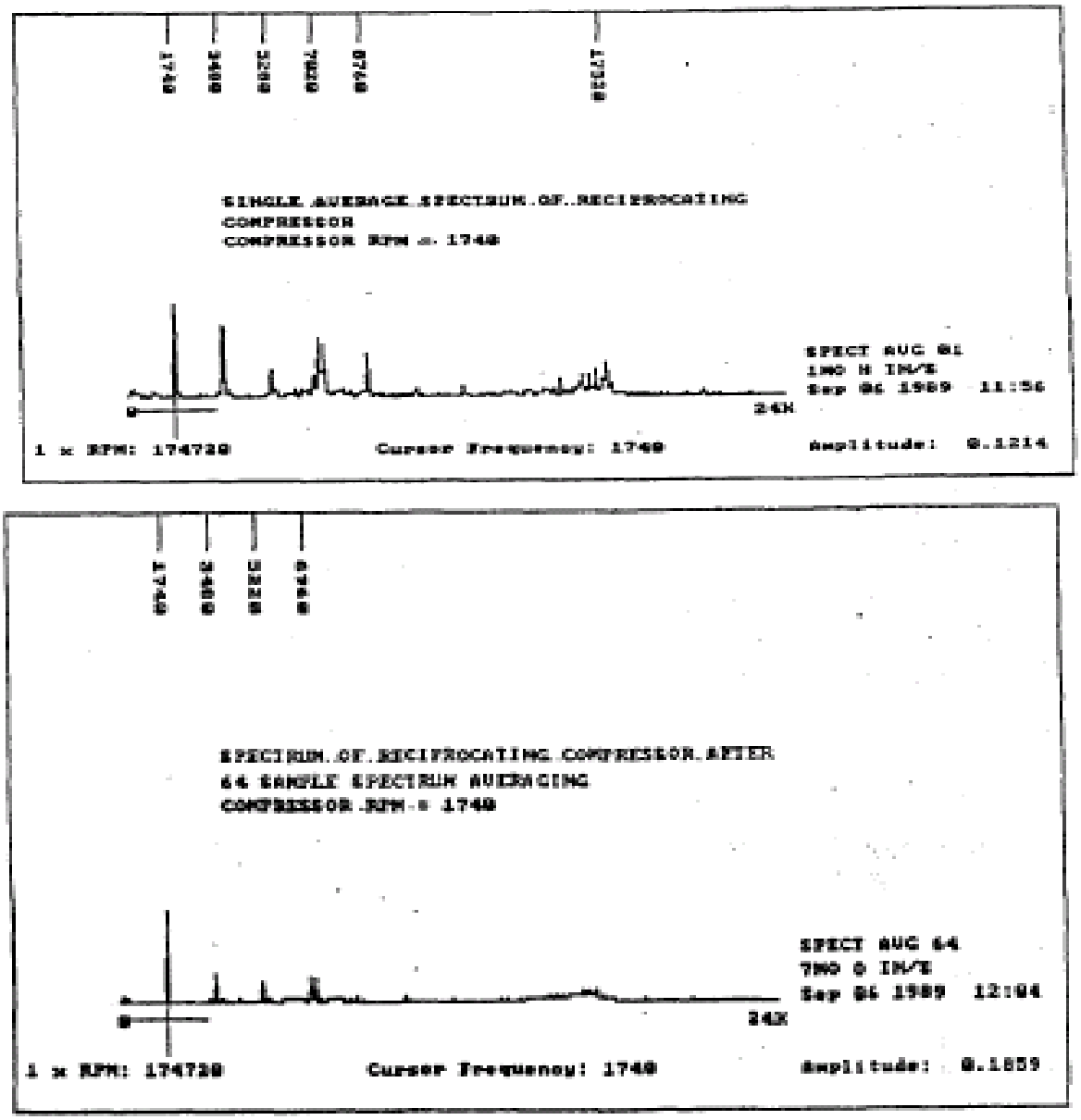

Figure 3-32: A Comparison of averaged and non-averaged FFT data

The component at 5 x RPM that appeared in the single sample average was apparently a "transient" vibration and only there during the time the data set was collected. Obviously, this vibration component is not representative of the machine's normal vibration characteristics and

could confuse the analysis process.

The obvious question is: "How many samples (data sets) of data are needed for a spectral average?" While no absolute answer can be given to this question, some reasonable guidelines can be offered based on experience.
First, the number of spectral averages is a compromise between the accuracy and validity of analysis data and data collection time. It should be obvious that it will take more time to perform an 8 average FFT than a 4 average FFT. Fortunately, the number of averages does not affect the amount of instrument and computer storage required. This is governed only by the number of lines of resolution selected for the FFT.
The following are some general guidelines that may be helpful in selecting the number of spectral averages for FFTs obtained for predictive maintenance and detailed machinery analysis:

1. For general machines included in a predictive maintenance program, such as fans, blowers, pumps, motors, etc., FFTs using 2 to 4 sample averages are normally adequate. Although there may be some affects from transient conditions, the ultimate goal of routine vibration checks in a predictive maintenance program is to detect potential problems. Once the possibility of a developing problem has been detected, a thorough follow-up analysis should be carried out to verify and identify the problem. If periodic checks reveal a potential problem, which is actually the result of a momentary or transient condition, a detailed analysis will so indicate.
2. When dealing with very high frequencies of vibration such as gear-mesh frequencies and those from defective rolling element bearings, a higher number of spectral averages, typically 4 to 8, is usually recommended. Sources of high frequency vibration tend to be somewhat more erratic and variable than problems that cause lower frequencies such as unbalance and misalignment. Since higher F_{max} FFTs take less time, there is no significant increase in data collection time using a slightly higher number of spectral averages.
3. When performing a detailed analysis of a machine's vibration, analysis time is rarely a major concern. In other words, whether it takes 5 minutes or 10 minutes to collect the detailed data needed to analyze the problem is of little concern. Therefore, when performing a detailed analysis, a minimum of 4 to 8 averages are recommended for general types of machines. When dealing with high frequencies of vibration, such as gear-mesh frequencies, a minimum of 8 averages is recommended.
4. Where the appropriate number of spectral averages is not known, a simple comparison can be performed to determine the number best suited for data collection and analysis on a specific machine. Simply take and observe an FFT taken with 2 averages and compare it to an FFT taken with 4 averages. If the 2 and 4 average FFTs appear different, take an FFT with 8 averages and compare it to the one taken with 4 averages. If the 4 and 8 sample averages are nearly the same in appearance, then a 4-sample average is probably sufficient.

CHAPTER 4 TIME WAVEFORM ANALYSIS

Waveform data has been an area of neglect since many analysts have not had the fundamental training to properly use the waveform for diagnostic purposes. This section discusses some of the fundamentals of Time Domain data. The time domain (Waveform) data can be very valuable to the analysts especially with complex machines, however there are characteristics and specific events that do not translate to the frequency domain as discrete peaks. In order to truly understand this limitation the analysts must first understand how the time domain data is gathered and transformed into a spectrum through the Fast Fourier Transform (FFT) process.

4.1 WHAT IS A WAVEFORM?

Time domain data, raw transducer output, signal voltage and many other terms refer to waveforms. The difference relates to the input transducer type, the axes being considered (magnitude vs. time) and whether or not the signal has been manipulated with a digital signal analyzer. Historically, waveform data has been gathered using analog systems. Waveform or time domain data is comprised of amplitude with respect to time. Signal with an amplitude, whether vibration, current, voltage changes, or other signal types change with time. The time change may be slow (1-10 minutes) or extremely fast (1-200 msec). In either case, time is primary aspect of understanding waveform.

4.2 WAVEFORM CHARACTERISTICS

There are certain things to look for when conducting waveform analysis. In order to know what to do for, we should discuss the characteristics and what they need to the analyst.

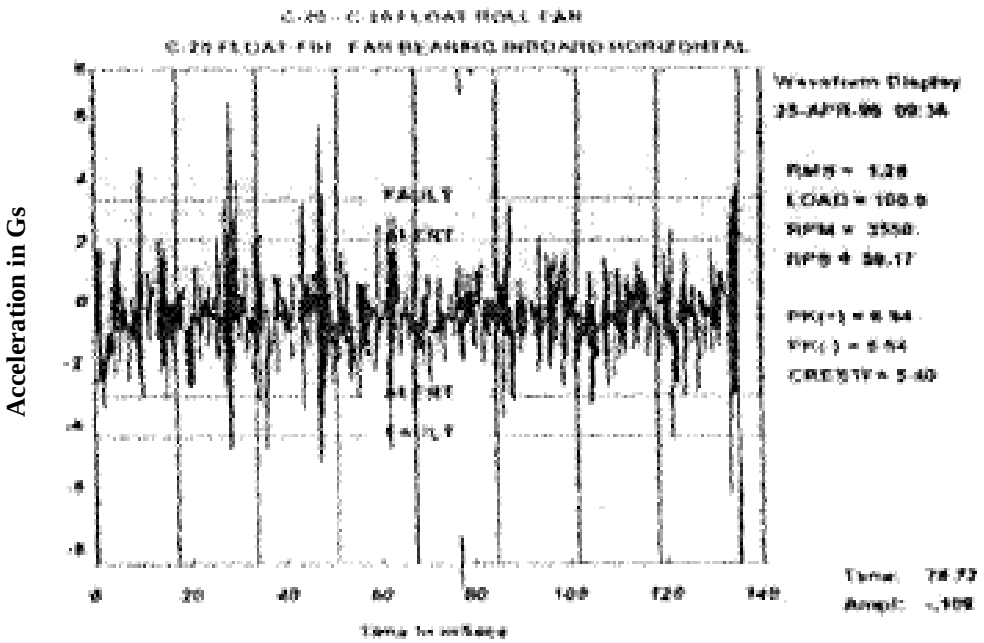

Figure: 4-1: A typical Time waveform

As was previously stated, the waveform provides specific characteristic for the fact of a single or multiple nature. Those machines containing multiple defects are much more complex and require additional time during the analysis procedure. The waveform is only as good as its definition. If the resolution of your waveform lacks definition, the data can be worthless or poor at best. Once the characteristics has been properly identified, the analyst can rule out

certain fault types

For example:
If a waveform is periodic (sinusoidal)

- Looseness
- Cracks
- Resonance
- Antifriction Bearings

Could probably be rule out. You may not know what the problem is, but you know what it is not.

Listed below are Waveform characteristics an analyst should look for when analyzing the waveform

Amplitude	Periodic	Complexity
Spikes/Impacts	Discontinuities	Electrical v Mechanical
Non periodic	Distortions	Low frequency event
Modulation	Asymmetry	Truncation/Restriction to motion

4.3 AMPLITUDE

When diagnosing machinery faults using the time waveform, similar to spectral data we are concerned with the amplitude of the waveform. When we are discussing bearing and gear waveforms, we use the peak to peak amplitude of the waveform. This is often referring to as "g swing". The g swing is the sum of the absolute value of the maximum positive and negative amplitude in that period.

PK(+) =6.94: PK(-) =5.84

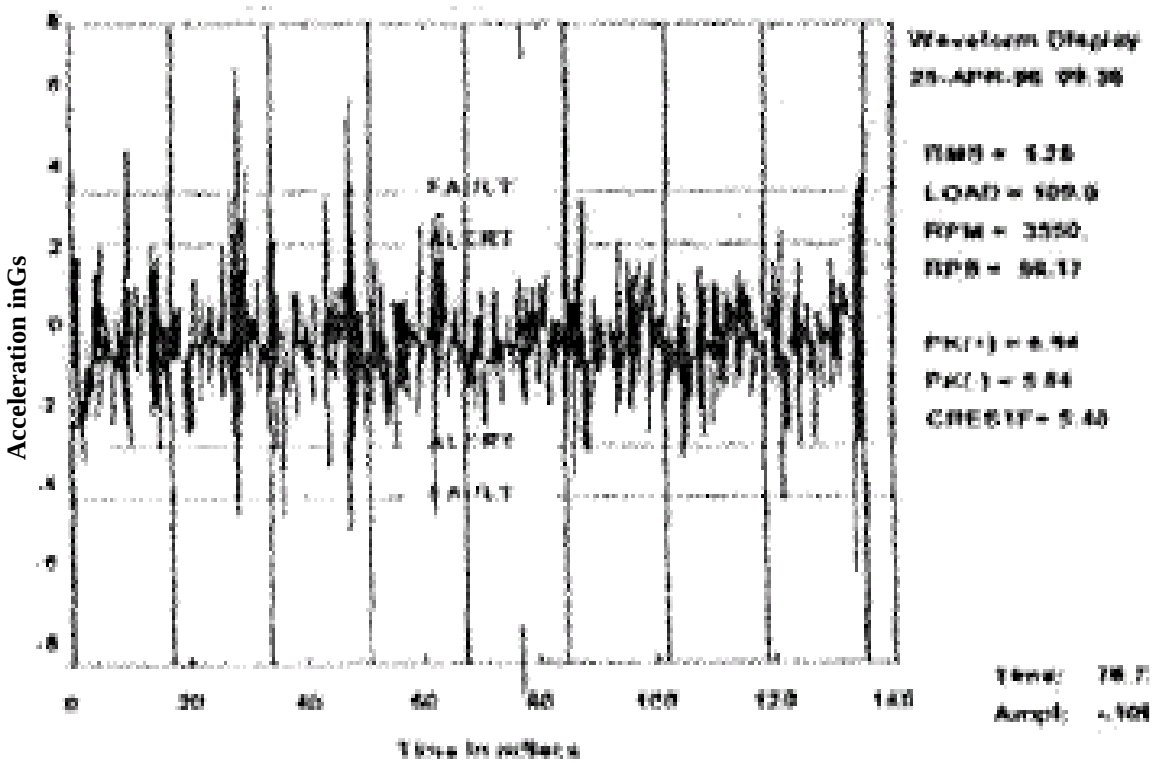

Figure: 4-2

4.4 PERIODIC

Sometime referred to as a deterministic simple signal, this is an ideal signal which repeats itself exactly after a fixed period. This is not possible in the real world. However, there are some machinery faults, which have this characteristic. A single plane balance problem will have a very periodic waveform due to the mass rotational center and the rotor shaft of other component centerline differences.

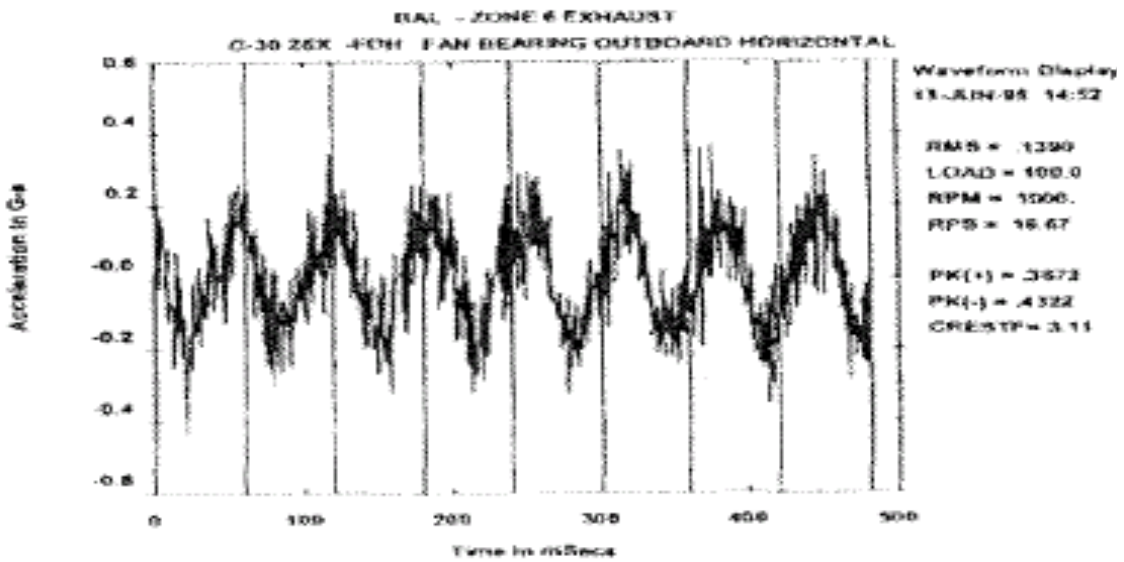

Figure: 4-3

4.5 COMPLEXITY

To determine the complexity of the waveform, establish whether the signal is

- Periodic in nature
- Estimate the harmonic content
- Determine if the signal is synchronous
- Non-synchronous
- Identify whether the waveform correlates directly to the spectral data.

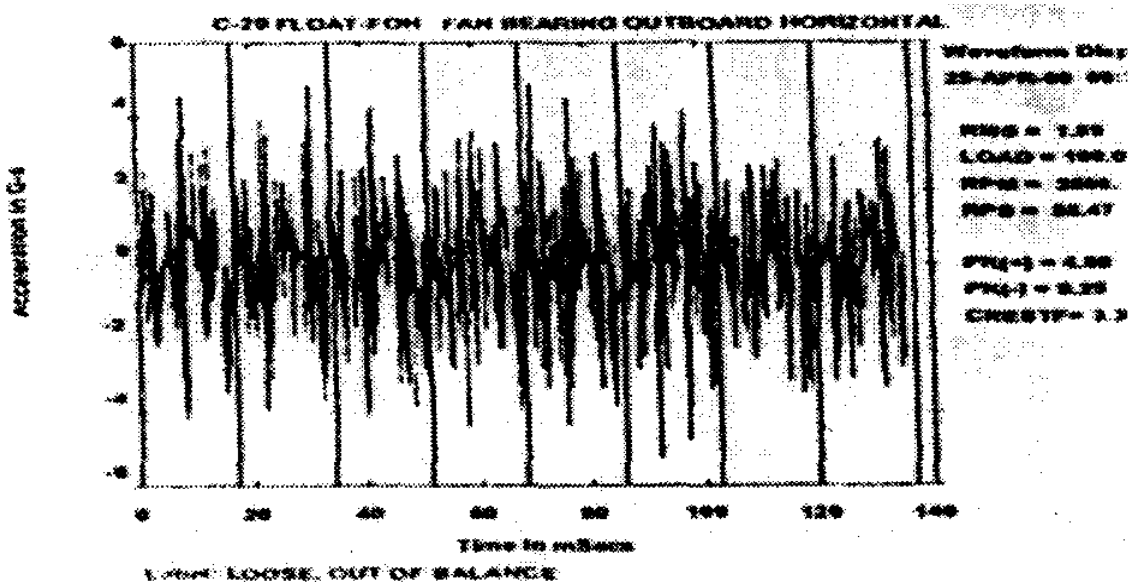

Figure: 4-4

4.6 IMPACTS/SPIKES

Impacts or spikes may or may not be repetitive in nature. The non-repetitive spikes generate white noise. In other words they excite all of the frequencies present. Repetitive impacts or spikes such as those produced by rolling element bearing defects or broken gear teeth may excite discrete frequencies and therefore show up well in the spectrum. The excitation is proportional to the energy induced by the impact. This characteristic is best detected by defining a waveform amplitude type in acceleration. Acceleration data is proportional to force and the sudden impact induces a force, which could be of great importance. The Crest Factor which is equal to the maximum peak (positive or negative) divided by the rms of the waveform, is a good indicator of the impacting.

PK(+) = 28.64; PK(-) =24.12; CRESTFT = 8.38

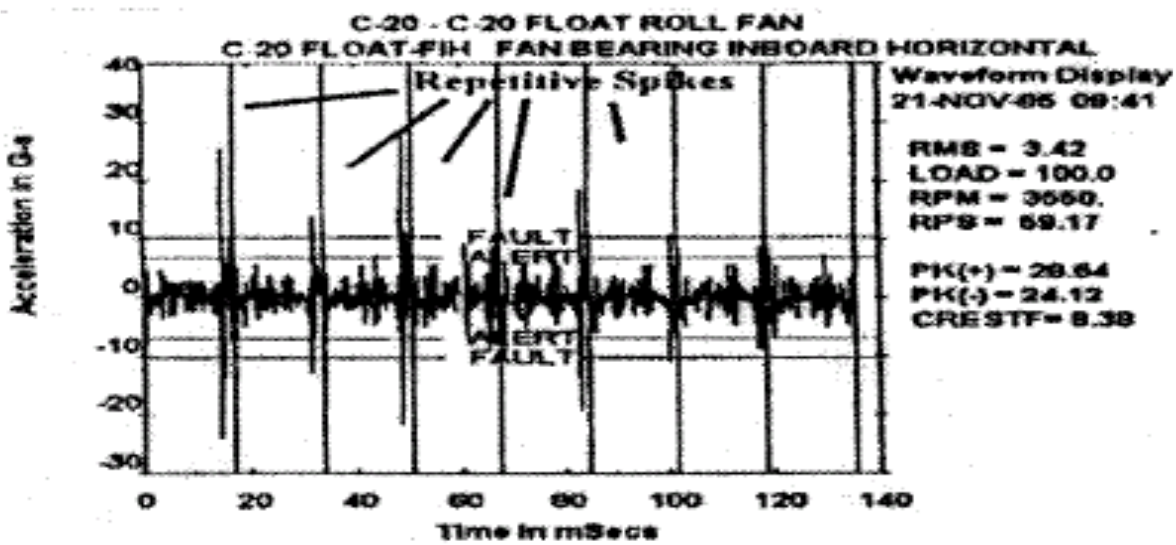

Figure: 4-5

4.7 DISCONTINUITIES

This characteristic is usually associated with faulty equipment due to the discontinuous nature

of the data. Data with this characteristic has breaks in the data where there appears to be a loss of input signal or a significant increase/decrease in amplitude. This is not a uniform change such as resonance, load changes, or even sudden component failures. Discontinuous data is typically unpredictable and very distinct.

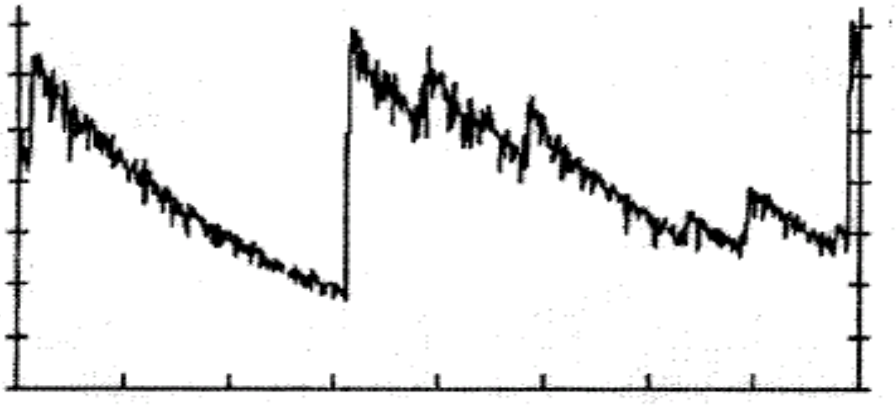

Figure: 4-6

4.8 ASYMMETRY

Asymmetry refers to the relationship between the positive and negative energy. A waveform is asymmetric when there is more energy in the positive plane than the negative or vice versa. Notice that in the figure the waveform display shows the peak positive/negative energy. We can use this information to make some assumptions about our data. Asymmetry refers to the direction of movement relative to the transducer mounting with a positive signal representing energy into (towards) the accelerometer and a negative signal representing away. A tool which is designed to check this type of characteristic is the APD, Amplitude probability distribution.

PK (+) =2.24: PK (-) = 1.43

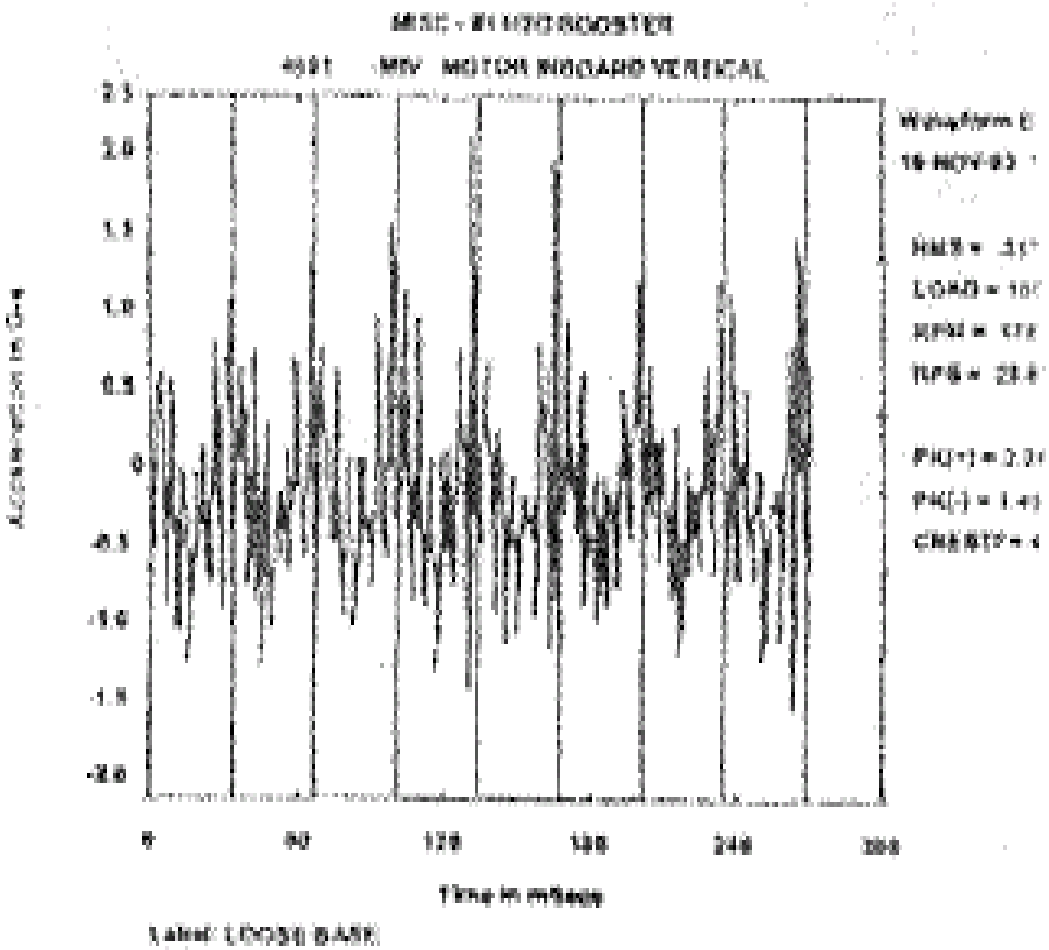

Figure: 4-7

4.9 LOW FREQUENCY EVENTS

When performing detailed analysis, you need to be able to collect and analyze data in excess of one minute for low frequency problems. This is extremely important when the machine in question has an operational speed below 200 rpm. The challenging identifying low frequency defect is having sufficient time in the waveform. A low frequency event may only appear once in the collective time domain. As discussed earlier this event will not be transformed into the spectrum. The waveform data in the fig displays an event that occurs approximately every two seconds or 0.5 Hz (30 cpm). Therefore unless you were specifically looking for a low frequency event with a very low frequency setup using special transducers you could have missed the event completely.

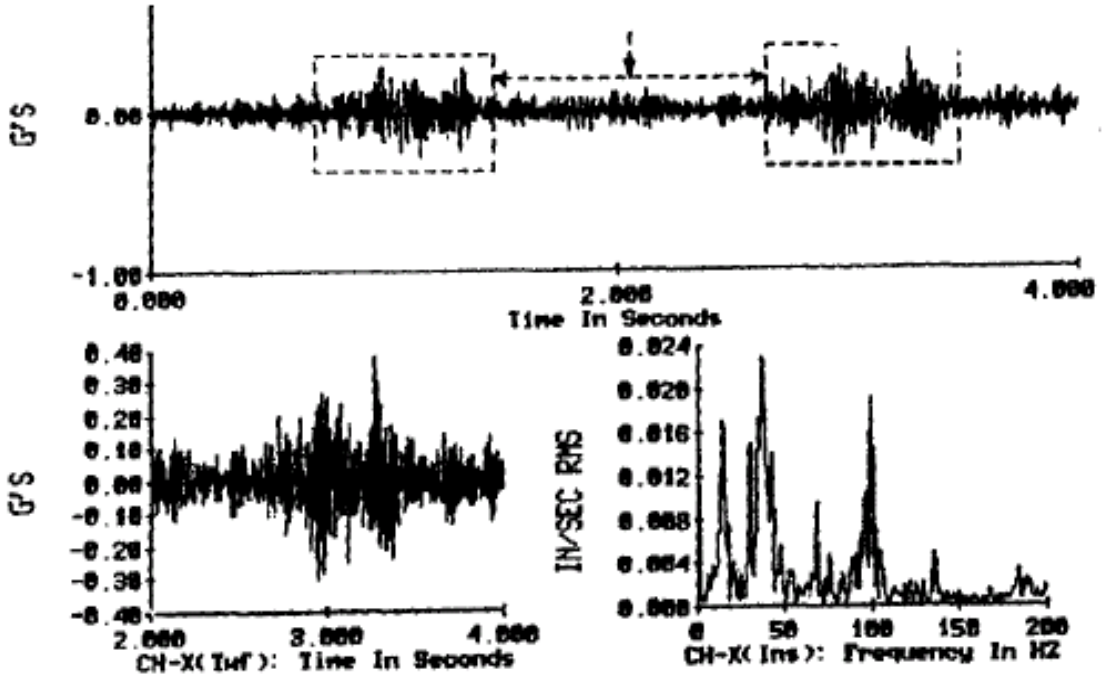

Figure: 4-8

4.10 ELECTRICAL VS MECHANICAL

Determining if the source of energy is mechanical or electrical is sometimes difficult. Appropriately setup waveforms can be a great help. Setting up for a long enough time to capture the operational conditions and the machines shut off point can identify the source. The advantage of using the time domain as opposed to the frequency domain is there is no need to worry about the screen update time or sampling rate.

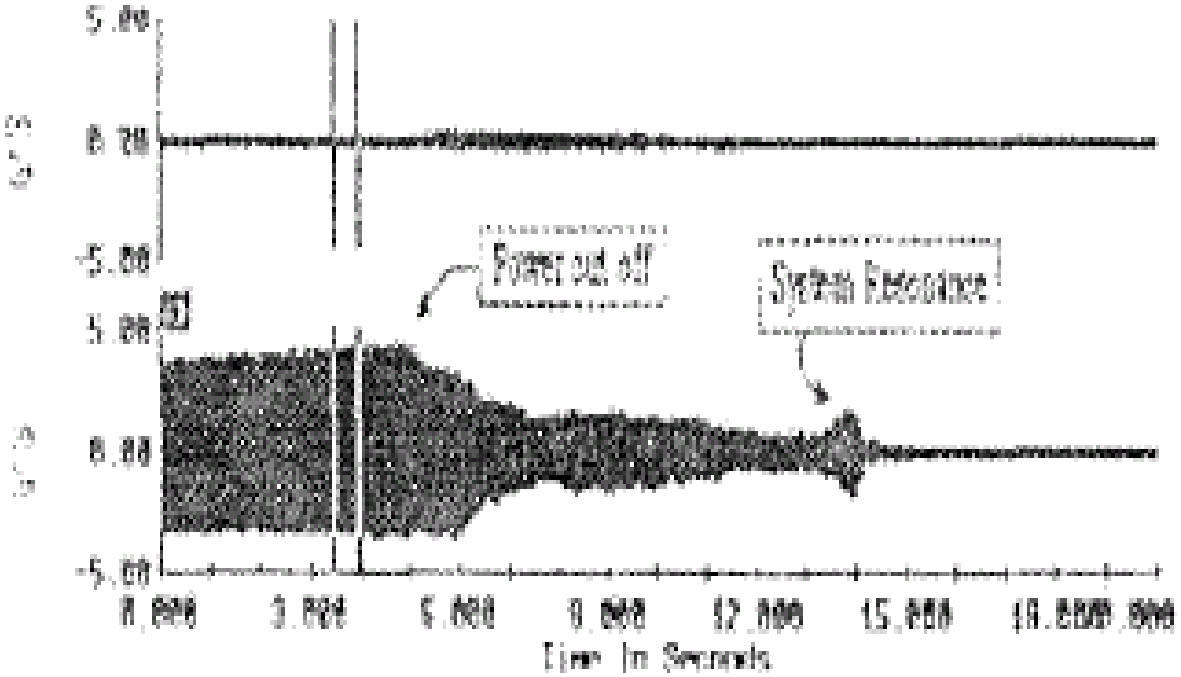

Figure: 4-9

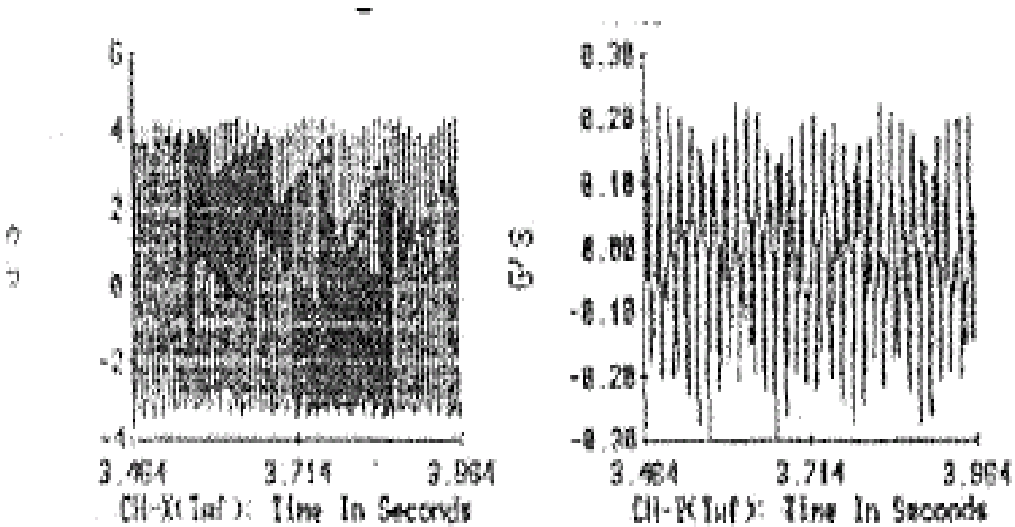

Figure: 4-10

4.11 WAVEFORM ANALYSIS AS CONFIRMATION

One of the most functional uses of waveform analysis is to confirm the diagnosis of a particular fault type. Every fault condition has a corresponding waveform characteristic. Unbalance, for example, has a sinusoidal pattern with one major event per revolution. Misalignment, which is primarily offset, typically has harmonic activity with the waveform having the same number of events per cycle as the spectral data has peaks. A miss alignment condition generating a second and possibly a third order peak shows two or three sine waves per revolution. Looseness will have a complex waveform with many peaks within one revolution. This will confirm the spectral characteristics of multiple harmonics of turning speed. The following case histories show to use waveform data to confirm existing spectral analysis. We are not suggesting that the primary diagnosis be conducted in the time domain. But it should be used to reassure the analyst of his judgment call.

4.12 CASE HISTORY 1

4.12.1 Vertical Turbine Pump Unbalance

The vertical pump motor bearing spectrums shows unbalance as the major forcing function. The time waveform confirms the diagnosis. The motor was shaking so bad, the leads were chafing in the terminal box and grounding to the frame.

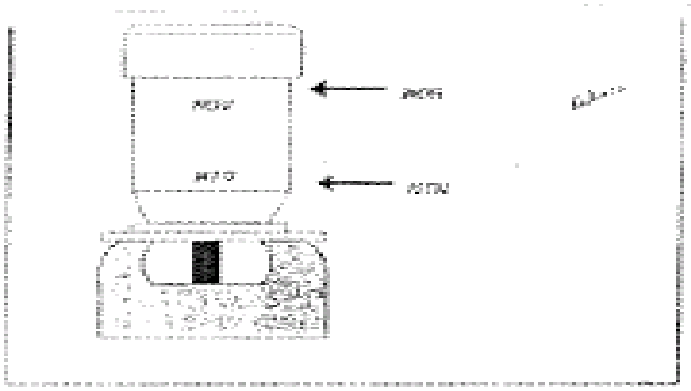

Figure: 4-11

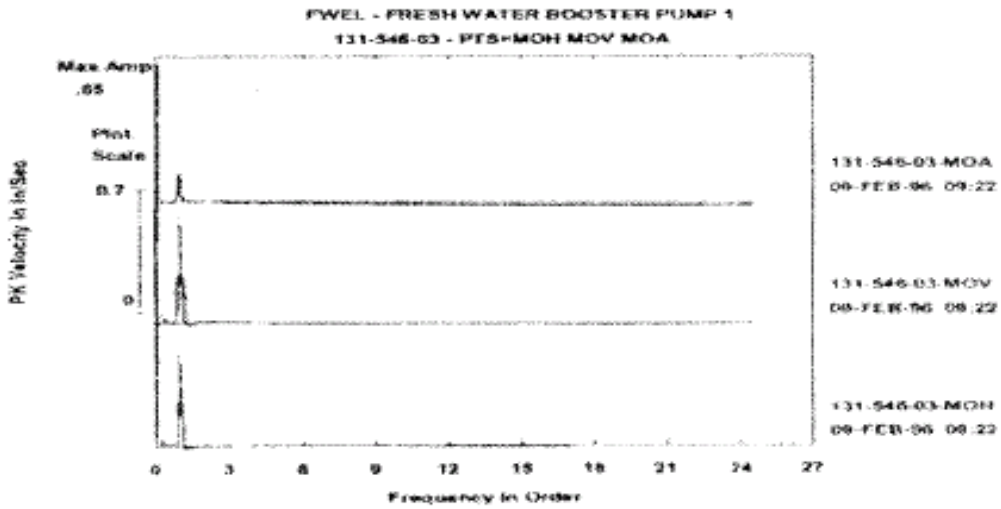

Figure: 4-12

Multi-spectra Plot-Data Comparison

The multiple point spectrum plots above shows radial and axial measurements taken from the top of the vertical motor. The spectrums show a dominant peak at 1x turning speed. The highest level is at the MOV position. Note the absence of harmonic activity and low level of non-synchronous energy. The radial directions are much higher than the axial.

Single Spectrum - Amplitude Relations

The single spectrum plot below taken from the top of the motor, MOV, shows the predominant signal at 1xRPM (1776). The harmonic cursor shows the lack of any harmonic activity. The sharpness of the peak indicates that it has been created from a waveform dominated by a single frequency.

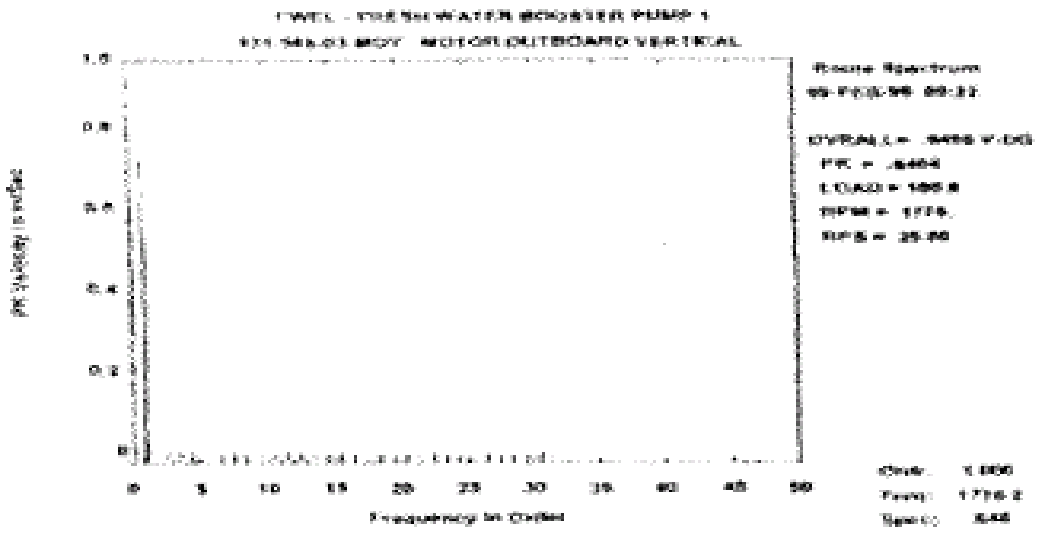

Figure: 4-13

Time Waveform - Sinusoidal

The time waveform shows the last time block stored by the analyzer. Approximately 270 milliseconds of time (8 shaft revolutions) show the clear one per revolution signal generated by the unbalance condition. The repeatability of the signal and the lack of impacting confirm the diagnosis.

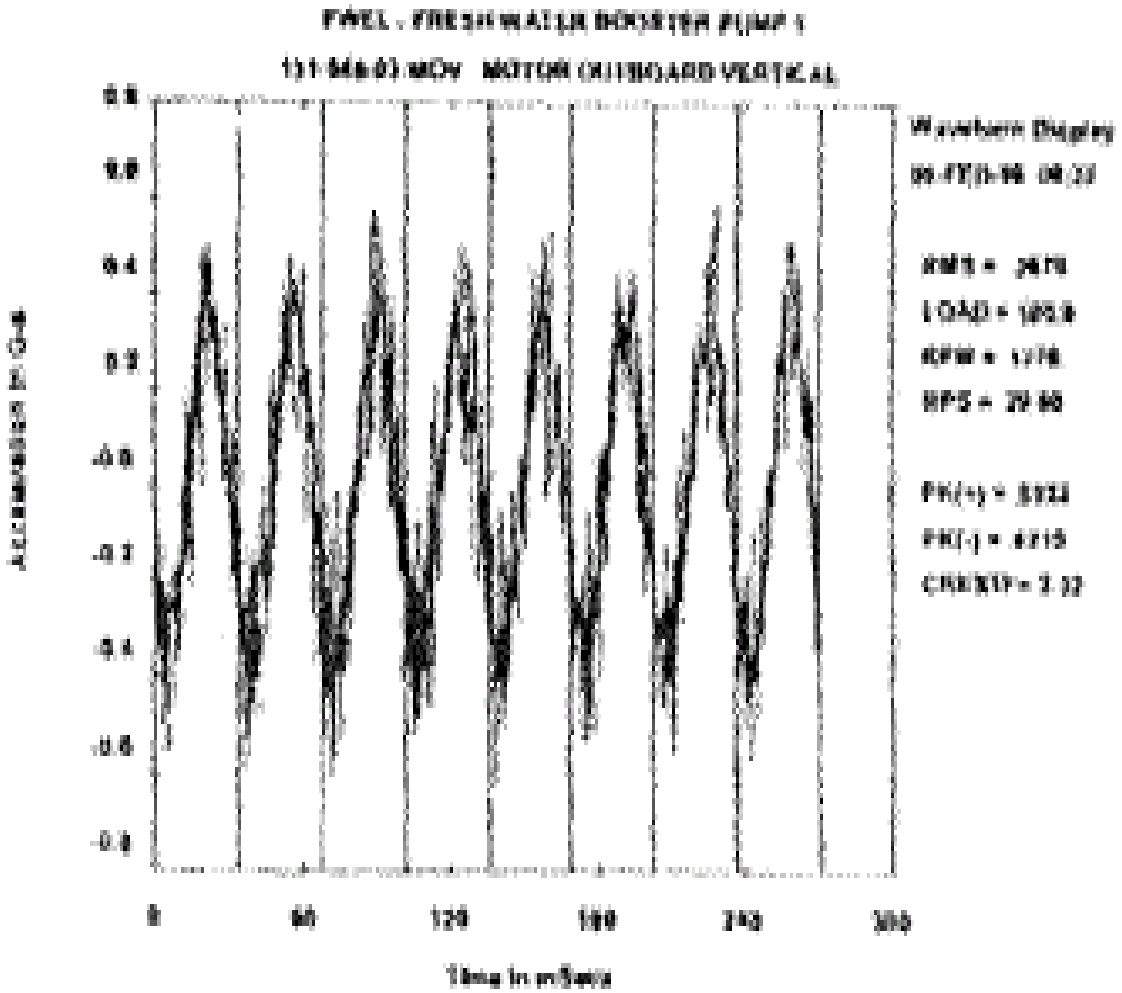

Figure: 4-14

4.13 CASE HISTORY 2

4.13.1 Fan Bearing Looseness

The fan bearing looseness data provides the initial spectral data for diagnostics and the waveform data to confirm the looseness fault diagnosis

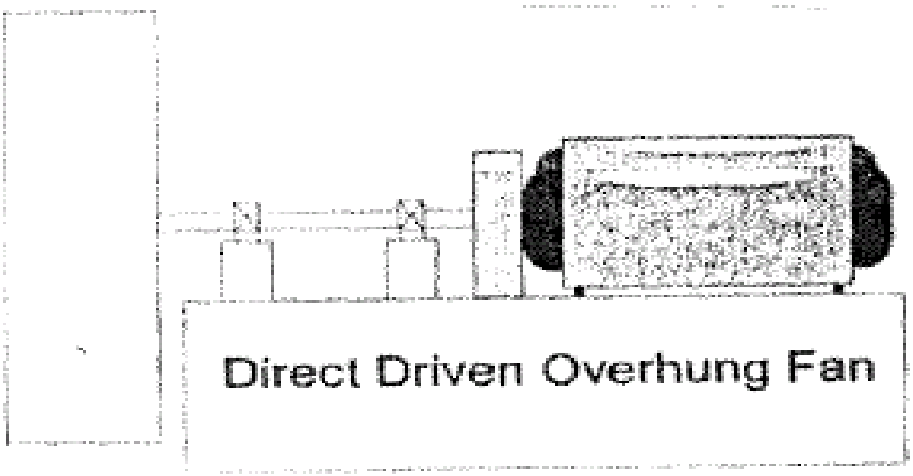

Figure: 4-15

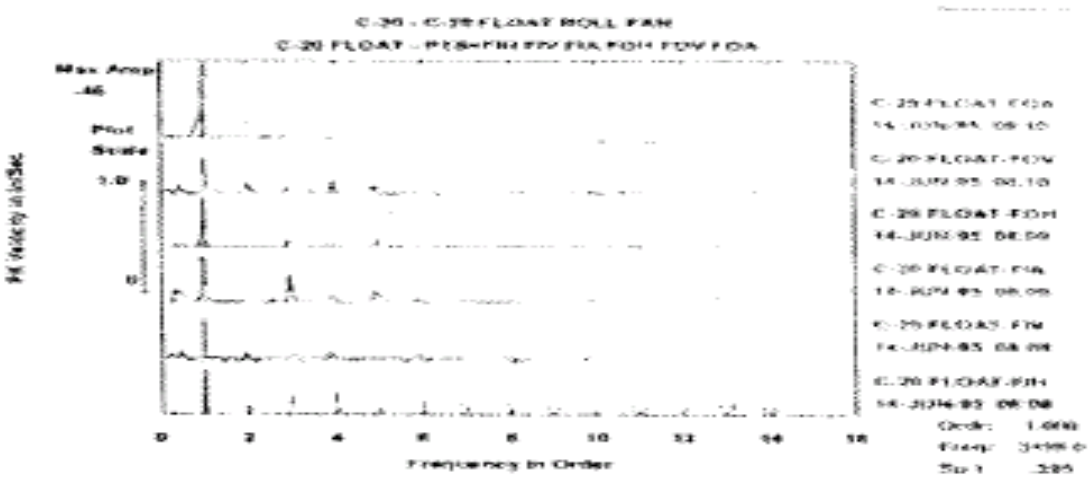

Figure: 4-16

The fan ran in an out of balance condition for two years. The bearings now have excess clearance, allowing the shaft to move around.

Multi-spectra Data comparison

The order based plot above shows radial and axial measurements on the outboard and inboard turbine bearings. The major peaks in the radial directions are all found at one order of running speed (i.e., 1 x running speed). Also the highest amplitudes of the plot appear to be in the horizontal planes at the inboard and outboard locations. Also note the small amounts of harmonic activity and axial data amplitude.

Single Spectrum - Amplitude Relations

The spectral plot below shows vibration in the horizontal direction on the fan outboard bearing. The cursor markers note the locations of harmonics of running speed. Virtually all the vibration energy in this spectrum is caused by turning speed and harmonics. The sides or skirts, of this

peak are also very narrow. The number of harmonics tells us that the spectrum is derived from a complex, repetitive time waveform.

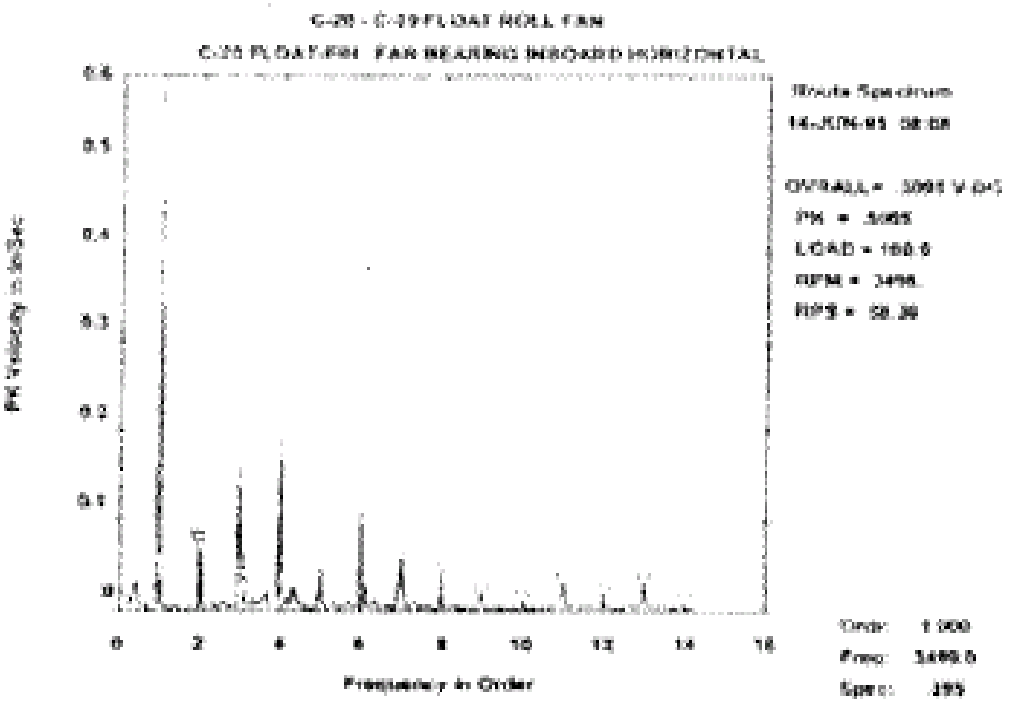

Figure: 4-17

Time Waveform - Sinusoidal Character

The waveform below shows instantaneous acceleration over 240 milliseconds in the horizontal direction on the fan inboard bearing. Vertical lines shows the time required for the fan shaft to make one complete revolution. The waveform is in units of acceleration since the probe used to collect data was an accelerometer. A clear and repeatable waveform occurs once per shaft revolution, 1 x RPM. There are also multiple peaks within one revolution. The waveform shows the acceleration created on the bearing housing by the looseness. The repeatability of the waveform in time with respect to the shaft turning speed and amplitude means that the vibration force is tied to the shaft running speed. This is true of waveforms collected in acceleration, since they can be influenced by high-frequency energy bursts, such as impacts.

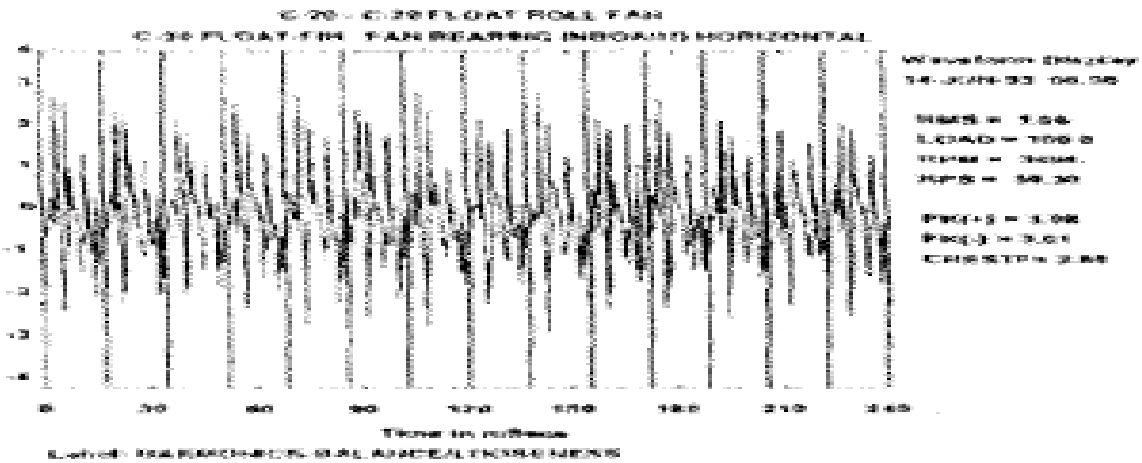

Figure: 4-18

SUMMARY

Waveform data may be used for much more than what is typically seen in industry. The ability to check for specific characteristics such as periodicity and modulation helps the analysis process. Energy balance (asymmetry) may be checked for direction of signal and for the predominant traits of the signal. Overall waveform is much more understandable and useful than most would lead us to believe. However, this section enhances your analysis abilities using the time waveform.

CHAPTER 5 VIBRATION ANALYSIS & FAULT DIAGNOSIS

5.1 DEFINE THE PROBLEM

The first step in solving a vibration problem, or any problem for that matter, is to define the problem. In other words, "Why is a vibration analysis needed?" It's difficult to solve a problem when one doesn't even know what the problem is or what the desired outcome should be.

The following lists some of the reasons for performing a vibration analysis:

1. **Establish "baseline data" for future analysis needs.** At the beginning of a predictive maintenance program, even machines in good operating condition should be thoroughly analyzed to establish their normal vibration characteristics. Later, when problems do develop, this baseline information can be extremely useful in performing a follow-up analysis to show precisely the vibration characteristics that have changed.
2. **Identify the cause of excessive vibration.** Referring to the vibration severity guidelines presented in Chapter 2 of this text, machines in service that have vibration levels in the "rough" regions or greater should be thoroughly analyzed to identify existing problems for immediate correction. Once corrections have been made, a follow-up analysis should be performed to insure that problems have been solved and the machine returned to satisfactory condition. If all significant problems have been solved, the follow-up analysis data will serve as the baseline data for future analysis as outlined in (1) above.
3. **Identify the cause of a significant vibration increase.** Once a developing problem has been detected by routine, periodic checks, the obvious next step is to perform a detailed vibration analysis to identify the problem for correction. Here also, a follow-up analysis will verify that the problems have been corrected and provide a baseline for future comparisons.
4. **Identify the cause of frequent component failures.** Such as bearings, couplings, seals, shafts, etc.
5. **Identify the cause of structural failures.** Such as the structure or foundation, piping, etc.
6. **Identify the source of a noise problem.**
7. **Identify why a machine tool fails to produce a quality part.** In terms of surface finish requirements or maintaining dimensional tolerances.
8. **Identify why a machine fails to meet an established performance standard.** In addition to setting up a vibration predictive maintenance program, another important factor in improving the performance and reliability of machinery is to establish vibration acceptance standards for new and rebuilt machines. Many such standards exist such as those from the International Standards Organization (ISO), American Petroleum Institute (API), Hydraulics Institute (pumps), National Electrical Manufactures Association (NEMA), etc.

5.2 DETERMINE THE MACHINE HISTORY

Whenever a machine has excessive vibration or a history of premature failures, the obvious

questions that need to be answered are:

1. When did the problem start?

   And

2. Were any changes made to the machine before the problem occurred?

In many cases, the answers to these questions can provide valuable insight into the possible cause of the problem. In fact, in some cases, the answers to these questions may identify a cause that is so obvious that a detailed vibration analysis totally unnecessary.

5.3 DETERMINE MACHINE DETAILS

For the majority of machinery vibration problems, it will be necessary to obtain vibration amplitude-versus-frequency spectrums or FFTs to determine the detail of machine's vibration characteristics. However, this data is of absolutely no value to the vibration analyst unless some specific details about the machine are known. As already pointed out in chapters II and III, specific machinery problems are identified by relating their vibration frequencies to the rotating speed (RPM) of the machine components, along with other machine features such as the number of teeth on gears, the number of blades on a fan, etc. Without this detailed information, pinpointing a specific problem with a high degree of confidence is virtually impossible.

Some of the important detailed features of the machine that need to be known for accurate analysis include:

1. **The rotating speed (RPM) of each machine component:** Of course, direct-coupled machines have only one rotating speed (RPM) that needs to be known. However, machines that include gear drives will have more than one speed. For single gear increasers or reducers, both the input and output speeds are needed. For multiple gear increasers or reducers, the rotating speeds of the various intermediate gears must be known along with the input and output speeds. For belt-driven machines, the rotating speed of both the driver and driven units must be known, along with the rotating speed of any idler pulleys. In addition, the actual RPM of the drive belts must be known.

2. **Types of bearings:** Of course worn or defective sleeve or plain bearings will have different vibration characteristics than defective rolling-element bearings. Therefore, it is most important to know whether the machine has plain or rolling element bearings. If the machine has rolling-element bearings, it is also beneficial to know the number of rolling elements and other details of bearing geometry. With this information, the vibration analyst can actually calculate the frequencies of vibration caused by specific bearing defects such as flaws on the outer and inner raceways, rolling elements, etc

3. **Number of fan blades:** Knowing the machine RPM and number of blades on a fan will enable the analyst to easily calculate the "blade-passing" frequency. This is simply the product of the number of fan blades times fan RPM. This frequency of vibration is also called the "aerodynamic pulsation" frequency.

4. **Number of impeller vanes:** Similar to fans and blowers, knowing the number of vanes on a pump impeller allows the analyst to calculate the vane passing frequency, also called the "hydraulic-pulsation" frequency.

5. **Number of gear teeth:** The rotating speed and number of teeth on each gear must be known in order to determine the possible "gear-mesh" frequencies.

6. **Type of coupling:** Gear and other lubricated types of couplings can generate some unique vibration characteristics whenever their lubrication breaks down or if lubrication

is inadequate.

7. **Machine critical speeds:** Some machines such as high speed, multi-stage centrifugal pumps, compressors and turbines are designed to operate at speeds above the natural or "resonant" frequency of the shaft. The resonant frequency of the shaft or rotor is called its "critical" speed and operating at or near this speed can result in extremely high vibration amplitudes. Therefore, knowing the rotor critical speed relative to machine RPM and other potential exciting force frequencies are very important.
8. **Background vibration sources:** Many times the vibration being measured on a machine is actually coming from another machine in the immediate area. This is particularly true for machines mounted on the same foundation or that are interconnected by piping or other structural means. Therefore, it is important to be aware of potential "background" contributions. This is, especially true with machine tools, due to the low levels of vibration required. If possible, the machine under analysis should be shut down and readings taken to directly determine the amount and significance of background vibration.

5.4 VISUAL INSPECTION

Before collecting data, the vibration analyst should first make a visual check of the machine to determine if there are any obvious faults or defects that could contribute to the machines condition. Some obvious things to look for include:

1. Loose or missing mounting bolts
2. Cracks in the base, foundation or structural welds
3. Leaking seals.
4. Worn or broken parts.
5. Wear, corrosion or build-up of deposits on rotating elements such as fans.

OBTAIN HORIZONTAL, VERTICAL AND AXIAL SPECTRUMS (FFTs) AT EACH BEARING OF THE MACHINE TRAIN

In many cases, the analysis steps carried out thus far may be sufficient to pinpoint the specific problem causing excessive vibration. If not, the next step is to obtain a complete set of amplitude-versus-frequency spectrums or FFTs at each bearing of the machine train. For a proper analysis, the machine should be operating under normal conditions of load, speed, temperature, etc.

In order to insure that the analysis data taken includes all the problem-related vibration characteristics and, yet, is easy to evaluate and interpret, the following recommendations are offered:

5.5 USE THE SAME AMPLITUDE RANGE (SCALE) FOR ALL FFTS

Since the machine's vibration amplitude-versus-frequency characteristics will be presented in the form of graphic plots or FFTs, it is most important to use the same amplitude range for each FFT to simplify the comparison of data obtained at each bearing and measurement direction. If the data is presented with different amplitude scales, the interpretation and evaluation of the data becomes an extremely tedious, time consuming and confusing task.

The importance of using the same full-scale amplitude range for each plot can best be illustrated

by examining the comparative horizontal, vertical and axial FFTs presented in Figure 5-1. This data was taken on the outboard (D) bearing of the fan, and the full-scale amplitude range for each of the FFTs is 1.0 in/sec. In this case, it is immediately apparent that the vibration amplitude in the horizontal direction at a frequency of 1800 CPM is nearly ten times higher than it is in the vertical and axial directions.

Now, consider how much more difficult this comparison would be if the horizontal FFT was taken on a full scale range of 0.1 in/sec, whereas the vertical and axial FFTs were taken with a full scale range of 1.0 in/sec. If that were the case, the horizontal, vertical and axial amplitudes at 1800 CPM would actually be nearly the same, yet would not appear so.

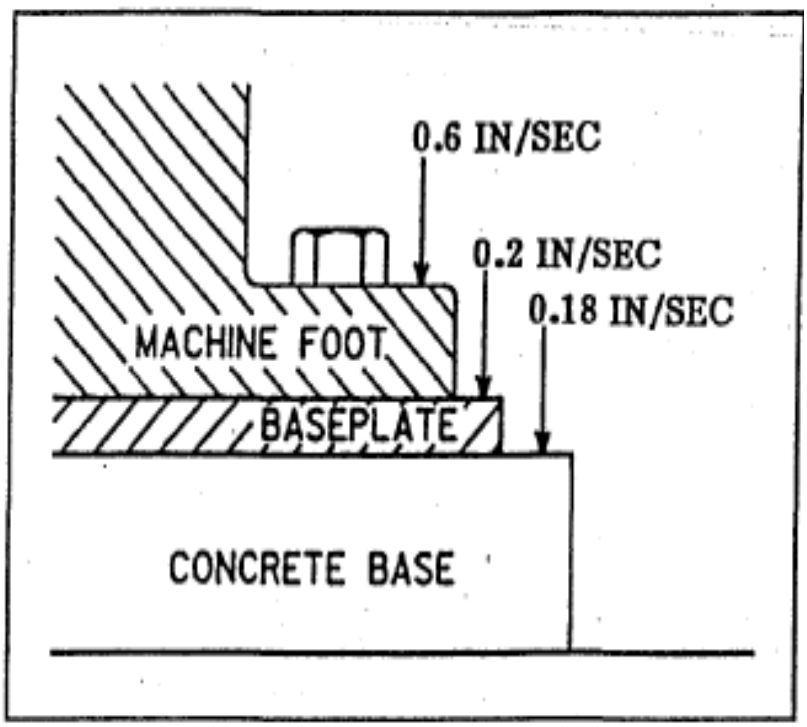

Figure 5-1: Using the same full-scale range for each FFT greatly simplifies interpretation of the data

For routine periodic checks as part of a predictive maintenance program, most FFT data collectors are used in an "auto ranging" mode, which means that the instrument automatically selects the most appropriate full-scale range for each overall measurement and FFT taken. While this is a great time saver when collecting routine data on many machines, when the data collector is being used to collect FFTs as part of a detailed vibration analysis, overriding the auto ranging feature to a fixed amplitude range is strongly recommended. To select the appropriate "fixed" full-scale range, simply take and record overall amplitudes at each measurement point and transducer direction to determine the highest amplitude reading. Then, simply select the lowest full-scale amplitude range that will accommodate the highest reading recorded and leave the instrument set to this range for all FFTs. By doing this, all FFTs observed on the instrument display screen will be directly comparable in the field.

If FFT analysis data is collected using different full-scale ranges, once the data has been downloaded to the predictive maintenance software, the amplitude scales can be adjusted or "normalized" to the same full-scale range by the software. This should definitely be done to simplify data comparison and interpretation.

DEFINE SPECTRAL PARAMETERS THAT WILL COVER ALL IMPORTANT

VIBRATION FREQUENCIES

It was discussed that frequency accuracy and the ability to separate potentially close frequencies of vibration with an FFT is determined by the choices of F_{max} (frequency range) and lines of resolution. These decisions must be made with great care to insure that all important vibration frequencies are detected.

In many cases, it will actually be necessary to take FFTs with different F_{max}s and lines of resolution in order to reveal all important vibration characteristics. For example, consider a 3550-RPM motor with rolling-element bearings driving a pump. Since the motor has rolling-element bearings, a relatively high F_{max}, typically 0 to 120,000 CPM will be needed to reveal the "ringing" resonant frequencies of the bearing components that may be present as the result of bearing deterioration. Remember from Chapter 3 that these bearing frequencies generally occur within a range from roughly 30,000 CPM to 120,000 CPM. Normally, 400 lines of resolution would be used for this "big picture" analysis, resulting in a frequency resolution of 300 CPM.

$$\text{Frequency Resolution} = \frac{F_{max}}{\text{Lines of Resolution}}$$

$$= \frac{120{,}000 \text{ CPM}}{400 \text{ Lines}}$$

$$= 300 \text{ CPM}$$

Of course, the motor could have electrical problems in addition to mechanical problems, and the vibration frequencies from these two different problems are very close together. Electrical problems such as cracked or broken rotor bars open or shorted windings, unequal air gap, etc., will occur at frequencies, which are exactly related to AC line frequency (typically 60 Hz or 3600 CPM). With this 2-pole motor, some electrical problems will have a vibration frequency at the actual rotating speed of the magnetic field, which will be exactly 3600 CPM. This is only 50 CPM different than the actual rotating speed (1 x RPM) frequency (3600 CPM - 3550 CPM = 50 CPM) and could not be separated or distinguished from the 1 x RPM vibration with a 300 CPM resolution FFT. In addition, many electrical problems will generate vibration at two times AC line frequency, which is typically 7200 CPM. Coupling misalignment will often cause a vibration at 2 x RPM, which in the example here would be 7100 CPM (2 x 3550 CPM = 7100 CPM) However, this mechanical problem has a frequency that is only 100 CPM less than two times AC line frequency (7200 CPM - 7100 CPM = 100 CPM.). An FFT with a frequency resolution of 300 CPM is obviously not capable of separating or distinguishing these potential frequencies either.

Because of the need to separate and distinguish between mechanical and electrical frequencies on induction motors, the recommended practice is to take at least one additional horizontal and one vertical FFT on the motor using an F_{max} of 0 to 12,000 CPM with 3200 lines of resolution. This will provide a frequency resolution slightly less than 4 CPM, making it possible to separate and distinguish between mechanical and electrical problem frequencies.

Other machines may require more than one set of FFTs with different F_{max}s and lines of resolution due to the extremely wide range of potential problem-related frequencies. Some examples include:

1. High speed gear drives with high gear-mesh frequencies but fairly low input or output speeds

2. Very low speed machines such as paper machine rolls with rolling-element bearings
3. Low speed cooling tower fans with integral gear drives.

If you are uncertain as to the F_{max} and lines of resolution best suited for an analysis, take an FFT with a fairly high F_{max} to determine the highest significant problem related vibration frequency, and then select the lowest F_{max} that will include this frequency. Of course, the most accurate data is that obtained with the highest possible number of lines of resolution. Therefore, if analysis data collection time and instrument and computer memory allow it, use the maximum, number of lines of resolution possible. In addition to any high F_{max} FFTs needed to detect high frequencies of vibration, also take FFTs using one or more lower FFTs such as the 12,000 CPM F_{max} recommended for detailed analysis of induction motors. When doing a detailed vibration analysis, it is better to take more data than necessary rather than miss important vibration details, and with a little experience and practice, selecting the appropriate FFT parameters for various machines will become nearly automatic.

5.6 INTERPRETING THE DATA

Once horizontal, vertical and axial FFTs have been obtained for each bearing of the machine train, the obvious next question is: "What is this data telling me?" Essentially, amplitude-versus-frequency spectrums or FFTs serve two very important purposes in vibration analysis:

1. Identify the machine component (motor, pump, gear box, etc.) of the machine train that has the problem.
2. Reduce the number of possible problems from several hundred to only a limited few.

5.6.1 IDENTIFYING THE PROBLEM COMPONENT BASED ON FREQUENCY

Figure 5-2 shows a fan operating at 2200 RPM, belt driven by an 1800-RPM motor. The rotating speed of the belts is 500 RPM. Assume that a vibration analysis was performed on this machine and the only significant vibration detected had a frequency of 2200 CPM or 1 x RPM of the fan. Since the vibration frequency is exactly related to fan speed, this clearly indicates that the fan is the component with the problem. This simple fact eliminates the drive motor, belts and possible background sources as possible causes.

Most problems generate vibration with frequencies that are exactly related to the rotating speed of the part in trouble. These frequencies may be exactly 1 x RPM or multiples (harmonics) of 1 x RPM such as 2x, 3x, 4x, etc. In addition, some problems may cause vibration frequencies that are exact sub harmonics of 1 x RPM such as 1/2x, 1/3x or 1/4 x RPM. In any event, the FFT analysis data can identify the machine component with the problem based on the direct relationship between the measured vibration frequency and the rotating speed of the various machine elements.

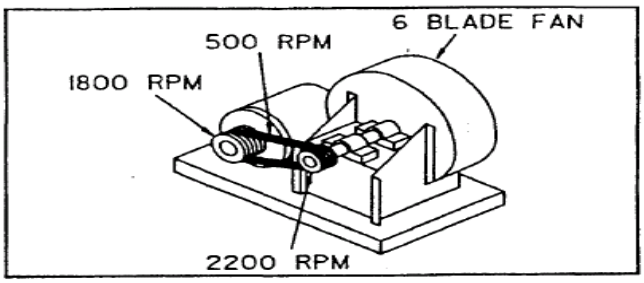

Figure 5- 2: Different component generate different vibration frequencies

5.6.2 IDENTIFYING THE PROBLEM COMPONENT BASED ON AMPLITUDE

Identifying the fan as the source of vibration based on vibration frequency was quite easy in the above example because of the notable differences in the rotating speeds of the various machine components. The obvious question, of course is: "What about direct-coupled machines that are operating at exactly the same speed?" In this case, the component with the problem is normally identified as the one with the highest amplitude. For example, consider a motor direct coupled to a pump. Examining the analysis data, it is noted that the highest vibration amplitude on the motor is 1.0 in/sec compared to 0.12 in/sec on the pump. In this case, the motor is clearly the problem component since its vibration amplitude is nearly 8 times higher than that measured on the pump.

In general, the machine component that has the problem is usually the one with the highest amplitude of vibration. The forces that cause vibration tend to dissipate in strength at increased distances from the source.

5.6.3 REDUCING THE LIST OF POSSIBLE PROBLEMS BASED ON FREQUENCY

In addition to identifying the problem machine component based on frequency and/or amplitude characteristics, the second purpose of FFT analysis data is to limit or reduce the list of possible problems based on the measured vibration frequencies. As stated earlier, each mechanical and operational problem generates its own unique vibration frequency characteristics. Therefore, by knowing the vibration frequency, a list of the problems that cause or generate that particular frequency can be made, which greatly reduces the long list of possibilities.

The chart in Figure 5-3 lists the most common vibration frequencies as they relate to machine rotating speed (RPM), along with the common causes for each frequency. To illustrate how to use the chart, assume that the belt-driven fan pictured in Figure 5-2 has excessive vibration at 2200 CPM which is 1 x RPM of the fan. Of course, this clearly indicates that the fan is the component with the problem and not the drive motor or belts. In addition, since the vibration frequency is 1 x RPM of the fan, the possible causes listed on the chart would be:

1. Unbalance
2. Eccentric pulley
3. Misalignment this could be misalignment of the fan bearings or misalignment of the fan and motor pulleys.
4. Bent shaft
5. Looseness
6. Distortion- from soft foot or piping strain conditions
7. Bad belts-if belt RPM
8. Resonance
9. Reciprocating forces
10. Electrical problems

Using this simple chart, along with the fact that the vibration frequency is 1 x RPM of the fan has reduced the number of possible causes from literally hundreds to only ten (10) likely causes.

A little common sense can reduce this list even further. First, since the vibration frequency is not related to the rotating speed (RPM) of the drive belts, possible belt problems can be eliminated as a possible cause. Secondly, since this is not a reciprocating machine such as a

reciprocating compressor or engine, the possibility of reciprocating forces can be eliminated from the remaining list. Finally, since the frequency is not related to the drive motor or AC line frequency in any way, the possibility of electrical problems can be eliminated. Now, the number of possible causes of excessive vibration has been reduced to only seven (7) by simply knowing that the vibration frequency in this case is 1 x RPM of the fan.

VIBRATION FREQUENCIES AND THE LIKELY CAUSES

Frequency In Terms of RPM	Most Likely Causes	Other Possible Causes & Remarks-
1 x RPM	Unbalance	1) Eccentric Journals, gears or pulleys 2) Misalignment or bent shaft - if high axial vibration 3) Bad belts if RPM of belt 4) Resonance 5) Reciprocating forces 6) Electrical problems
2 x RPM	Mechanical Looseness	1) Misalignment if high axial vibration 2) Reciprocating forces 3) Resonance 4) Bad belts if 2 x RPM of belt
3 x RPM	Misalignment	Usually a combination of misalignment and excessive axial clearances (looseness).
Less than 1 x RPM	Oil Whirl (Less than 1/2 RPM)	1) Bad drive belts 2) Background vibration 3) Sub-harmonic resonance 4) "Beat" Vibration
Synchronous (A.C. Line Frequency)	Electrical Problems	Common electrical problems include broken rotor bars, eccentric Rotor, unbalanced phases in poly-phase systems, unequal Air gap.
2 x Synchronous. Frequency	Torque Pulses	Rare as a problem unless resonance is excited
Many Times RPM (Harmonically Related Freq.)	Bad Gears Aerodynamic Forces Hydraulic Forces Mechanical Looseness Reciprocating Forces	Gear teeth times RPM of bad gear Number of fan blades times RPM Number of impeller vanes times RPM May occur at 2, 3, 4 and sometimes higher harmonics If severe looseness
High Frequency (Not Harmonically Related)	Bad Anti-Friction Bearings	1) Bearing vibration may be unsteady - amplitude and Frequency 2) Cavitations, recirculation and flow turbulence cause random, High frequency vibration 3) Improper lubrication of journal bearings (Friction excited vibration) 4) Rubbing

Figure 5-3: Vibration frequencies and their likely causes.

5.7 COMPARING TRI-AXIAL (HORIZONTAL, VERTICAL AND AXIAL) DATA

Once the list of possible problems has been narrowed down to a limited few, as in the case of the fan described above, the remaining list can usually be reduced even further by comparing the vibration characteristics measured in the horizontal, vertical and axial directions.

Not only can specific vibration problems be recognized by their specific frequency characteristics, but also in many cases by the direction in which the vibration occurs. This is why it is necessary to take analysis data in the horizontal, vertical and axial directions for further process of elimination.

Figure 5-4 shows a typical "set" of tri-axial data taken on one bearing of a belt driven fan operating at 2200 RPM. Of course similar data would be taken on the other fan bearing as well as the motor bearings. "Stacking" the horizontal, vertical and axial data for a particular bearing on the same sheet as shown, greatly simplifies the comparison. Note that the same full-scale amplitude range (0 to 0.3 in/sec) was used for all the data to further simplify the comparison.

There are basically two comparisons that need to be made from the data in Figure 5-4. First, how do the horizontal and vertical readings compare; and secondly, how do the radial readings (horizontal and vertical) compare to the axial readings.

5.7.1 COMPARING HORIZONTAL AND VERTICAL READINGS

When comparing the horizontal and vertical data, it is important to take note of how and where the machine is mounted and also, how the bearings are mounted to the machine. Basically, the vibration analyst needs to develop a "feel" for the relative stiffness between the horizontal and vertical directions in order to see whether the comparative horizontal and vertical readings indicate a normal or abnormal situation. Machines mounted on a solid or rigid base may be evaluated differently than machines mounted on elevated structures or resilient vibration isolators such as rubber pads or springs.

To explain the significance of machine stiffness, assume that the fan in Figure 5-4 is mounted on a rigid, solid concrete base, which, in turn, is mounted on a solid foundation located at ground level. This would be regarded as a "rigid" installation and under normal conditions the vertical stiffness would be greater than the horizontal stiffness. If such is the case, one would expect that normal problems, such as unbalance, would cause higher amplitude of vibration in the horizontal direction than the vertical direction. If a rigidly mounted machine has higher vibration in the vertical direction than the horizontal direction, this would generally be considered as "abnormal" and may indicate a looseness condition. On the other hand, if, the same machine is mounted on springs or rubber pads, a higher amplitude in the vertical direction may not be considered unusual or an indication of structural problems.

Another factor that needs to be considered is the "ratio" between the horizontal and vertical amplitudes. As explained, it is not unusual for rigidly mounted machines to have higher amplitudes of vibration in the horizontal directions, compared to the vertical direction. However, the ratio between the horizontal and vertical amplitudes should be checked to see if it is normal or indicative of some unusual problem. As a normal unbalance response, it is not unusual for machines to exhibit ratios between the horizontal and vertical amplitudes of 1:1, 2:1, 3:1 or 4:1, depending on the particular installation. In other words, it would not be unusual for a rigidly mounted fan, motor or pump to have a vibration amplitude at 1 x RPM as much as 4 times higher in the horizontal direction than the vertical direction due to unbalance. Ratios beyond 4:1 are somewhat unusual and typically indicate an abnormal condition such as

looseness or resonance.

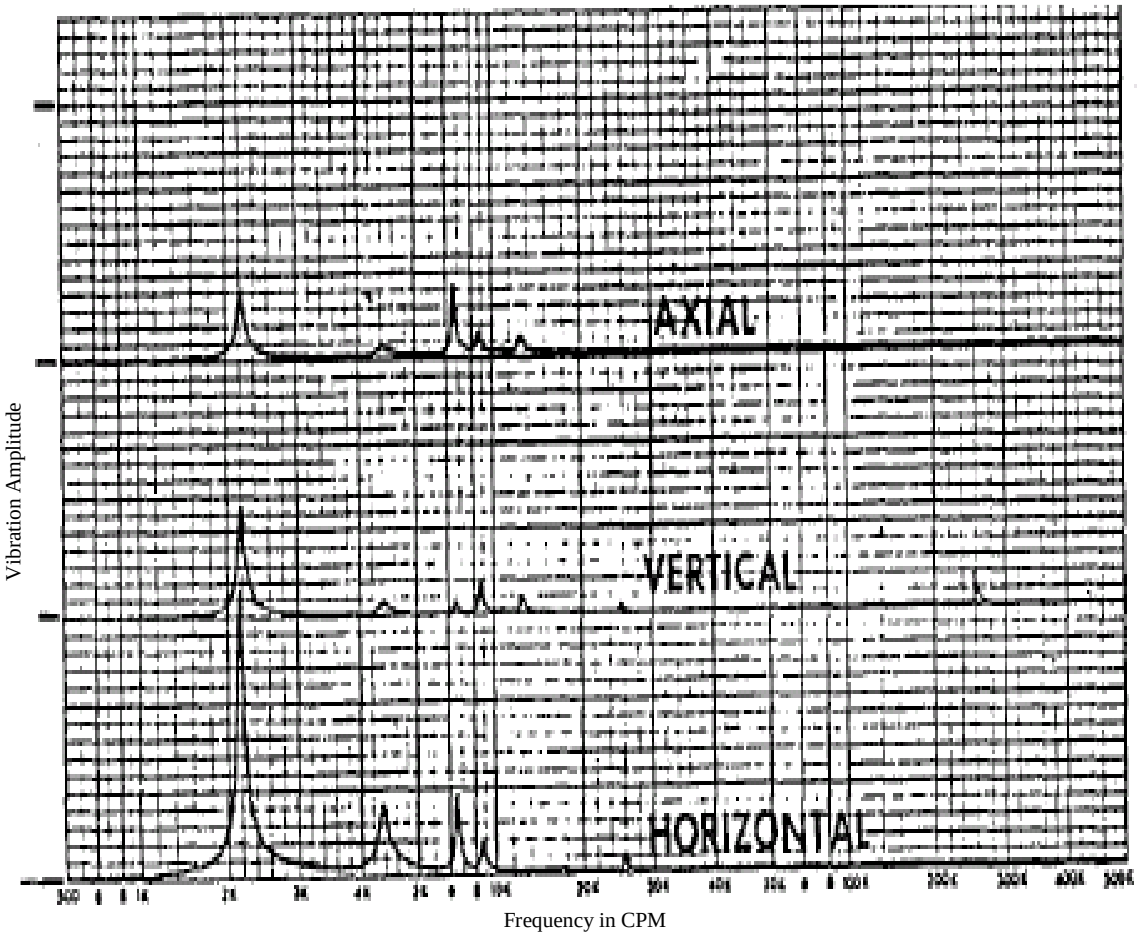

Figure 5-4: Typica Triaxial Data taken on belt drive fan

Examining the fan analysis data in Figure 5-4, it can be seen that the vibration at 1 x RPM in the horizontal direction is, in fact, higher than that in the vertical direction by a ratio slightly over 2:1. This would not be considered unusual for a rigidly mounted machine. By comparison, the analysis for the outboard bearing of the fan in Figure 5-1 shows that the horizontal amplitude at 1 x RPM is nearly ten (10) times greater than that measured in the vertical direction. This, obviously, is not a normal ratio and indicates a very highly directional vibration, perhaps due to looseness or resonance.

The second important comparison that needs to be made to tri-axial analysis data is how the radial (horizontal and vertical) readings compare to the axial readings. Relatively high amplitudes of axial vibration are normally the result of:

1. Misalignment of couplings
2. Misalignment of bearings
3. Misalignment of pulleys or sheaves on belt drives
4. Bent shafts
5. Unbalance of "overhung" rotors

As a general rule, any time the amplitude of axial vibration exceeds 50% of the highest radial (horizontal or vertical) amplitude, the possibility of a misalignment or bent shaft condition should be considered. Of course, extremely high amplitudes of axial vibration may also be due

to resonance or unbalance of an overhung rotor. Verifying the cause of a high axial vibration using "phase analysis" techniques will be covered in the sections to follow.

Examining the axial vibration in the examples given in Figures 5-1 and 5-4, it can be seen that in neither instance is the amplitude of axial vibration greater than 50% of the highest radial amplitude. As a result, misalignment or bent shaft conditions are not indicated in either of these examples.

5.7.2 SIDE-BAND FREQUENCIES

"Side-band" frequencies are additional vibration frequencies that often appear in FFT data that can be confusing to the beginning vibration analyst. Side band vibration frequencies are the result of a variation in the amplitude of a given vibration frequency signal as a function of time. This variation in amplitude with time is also called "amplitude modulation". For example, consider a rolling element bearing with a significant flaw or defect on the rotating inner raceway. As the inner raceway rotates, spike pulses will be generated each time a rolling element impacts the flaw. However, the amplitude or intensity of the pulses generated will vary as the defect rotates into and out of the load zone of the bearing. This is shown in Figure 5-5.

Impacts that occur when the defect is within the load zone will obviously be more intense than those that occur out of the load zone. The result is a modulation of the fundamental bearing defect frequency. The fundamental bearing defect frequency in this case is the frequency at which rolling elements impact the inner raceway flaw and is called the "ball passing frequency of the inner raceway" or simply BPFI. When discussing side-band frequencies, the fundamental bearing frequency in this case would be called the "carrier" frequency. The frequency at which the amplitude of the carrier frequency varies is called the "modulating" frequency. The modulating frequency in the case of a defect on the inner raceway will be 1 x RPM, since the defect is rotating into and out of the bearing load zone at the rotating speed of the shaft.

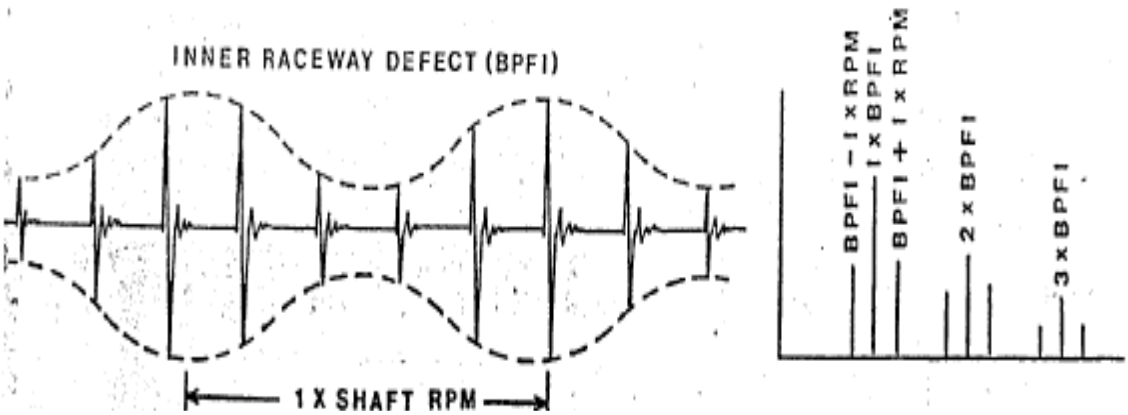

Figure 5-5: The amplitude of spike-pulses generated by an inner raceway defect is "modulated' at the rotating speed (1xRPM) frequency as the defect rotates into and out of the bearing load zones

The end result of amplitude modulation will be "side-band" frequencies above and below the fundamental carrier frequency and spaced at the modulating frequency. Figure 5-6 shows an FFT taken on a bearing with an inner raceway defect. The fundamental bearing defect frequency (BPFI) is clearly shown along with the side-band frequencies spaced at plus and minus the 1 x RPM modulating frequency. Since the bearing defect generates vibration in the form of a spike-pulse, harmonics of the fundamental bearing frequency are also evident, with plus and minus 1 x RPM side bands around each one.

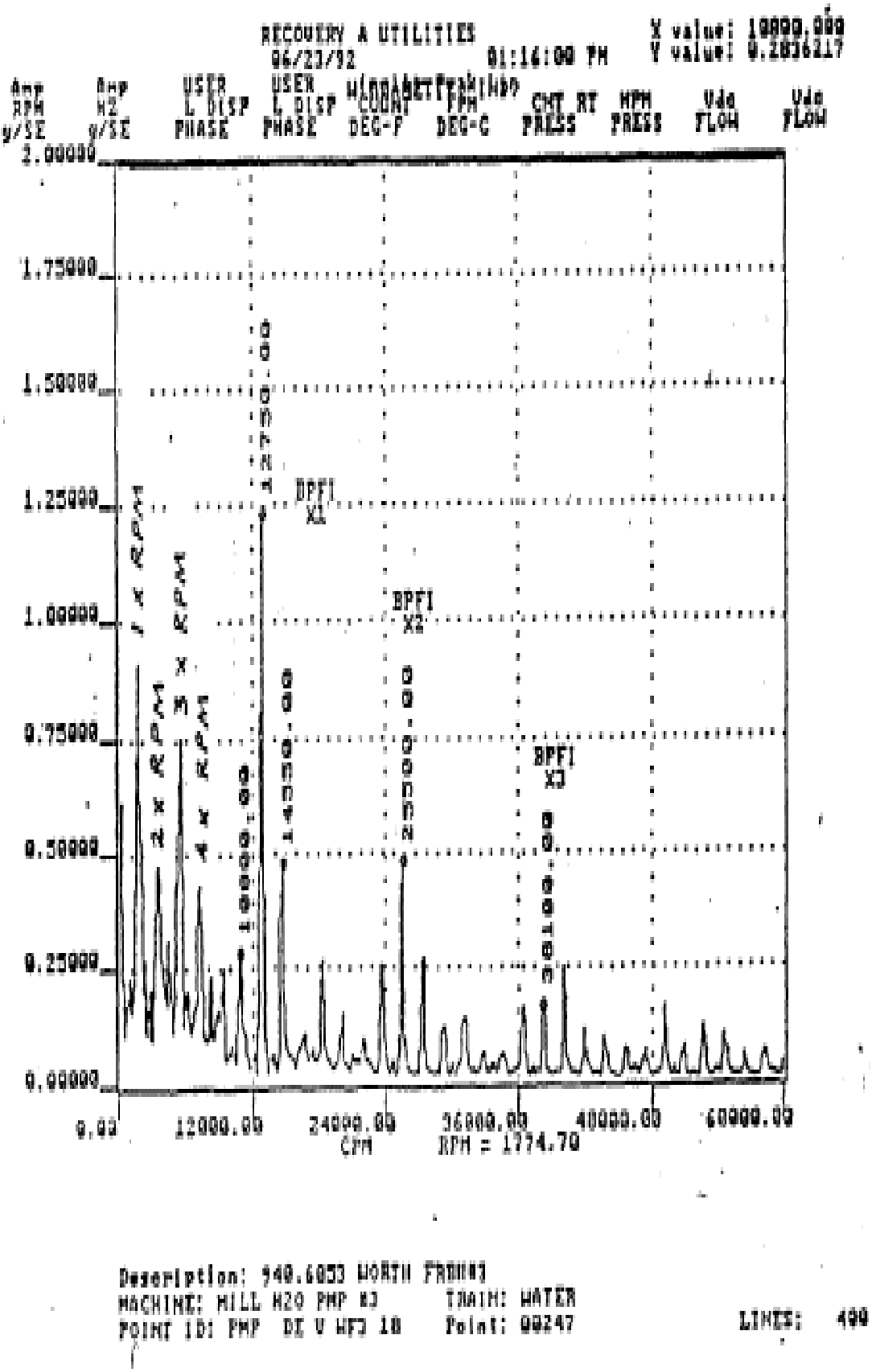

Figure 5-6: FFT of an inner raceway defect with 1xRPM sidebands around the bearing defect frequencies

5.8 VIBRATION DIAGNOSTICS

IDENTIFYING THE MOST COMMON MACHINERY PROBLEMS

It is beyond the scope of this text to describe the detailed vibration characteristics associated with every conceivable vibration problem that could ever be encountered. This text was written for those individuals who have little or no experience in the use of vibration detection and analysis techniques for predictive maintenance. The preceding portion of last chapter on vibration analysis outlines a logical common sense approached for obtaining and evaluating the vibration data needed to recognize and identifies specific problems. The proceeding section of this chapter describe more detailed information for the most common day to day problems you will encounter including:

1. Unbalance
2. Bent shaft
3. Misalignment
4. Looseness
5. Eccentricity problems
6. Resonance
7. Defective rolling- element bearings
8. Sleeve or plain bearing problems
9. Aerodynamic/hydraulic problems
10. Electric (induction) motor problems
11. Gear problems
12. Belt-drive problems

Vibration analysis, like medicine, is not an exact science. However, with the information provided in this chapter, combined with a little common sense, you should be able to pinpoint the majority of problems with confidence.

5.8.1 VIBRATION DUE TO UNBALANCE

Unbalance of rotating machine components is, perhaps, the easiest problem to pinpoint with confidence. Simple unbalance, uncomplicated by other problems, can be readily identified by the following characteristics:

1. The vibration occurs at a frequency of 1 x RPM of the unbalanced component. The presence of multiple, harmonic frequencies (i.e. 2x, 3x, 4x, times RPM) usually indicate additional problems such as looseness, rubbing, etc.
2. The radial vibration is reasonably uniform and not highly directional. A comparison of horizontal and vertical phase readings will normally show a difference between 60 degrees and 120 degrees. If comparative horizontal and vertical phase readings cannot be taken, multiple radial amplitude readings should not show a discrepancy in excess of 5:1.
3. If a specific machine component such as a motor or fan is the source of unbalance, that component will have significantly higher amplitudes of vibration at the 1 x RPM

frequency. Unbalance of couplings will likely reveal comparable amplitudes on both the driver and driven machine components.

Unbalance conditions can often be affected by other operating conditions such as load or temperature. For example, machines operating at elevated temperatures can physically distort or change shape due to thermal changes, resulting in a change rotor balance. Large, fabricated boiler draft fans must often be balanced at operating temperature due to thermal distortion. They may run smoothly when cold but vibrate excessively when hot.
In addition, due to minor variations in the track and pitch-angle of the fan blades, large fabricated fans may show significant changes in the unbalance vibration characteristics with changes in flow conditions. In other words, a change in the damper setting may result in a significant change in the unbalance amplitude and phase characteristics. Such affects are referred to as "aerodynamic unbalance", and point out the importance of balancing a rotor under its normal operating conditions of temperature and flow conditions.

5.8.2 BENT SHAFT PROBLEMS

Bent shafts are a common problem encountered on machinery, and are often the result of manufacturing errors or mishandling and damage during transportation or machine installation. In addition, a rotor may "bow" as the result of thermal distortion at elevated temperatures or due to excessive unbalance forces.

Regardless of the cause, bent shafts will usually generate a predominant vibration at 1 x RPM, very similar to simple unbalance. And, like unbalance, the radial vibration caused by a bent shaft will be fairly uniform and not highly directional. However, unlike unbalance, bent shaft conditions will normally cause a relatively significant vibration in the axial direction as well. As stated earlier, any time the amplitude of vibration measured in the axial direction exceeds 1/2 (50%) of the highest measured radial vibration, a bent shaft is a very possible cause.

Because bent shafts cause significant vibration in the axial direction, a bent shaft problem can normally be verified using a phase analysis of the axial vibration. However, there are actually two different types of bent shaft conditions:

1. Rotors that have a simple "bow"

   And

2. Shafts that have a bend or "kink", but only near a particular bearing.

Each type of bend will result in significant axial vibration, but each type will cause the various bearings, of the machine to vibrate in the axial direction in a noticeably different manner. Therefore, an axial phase analysis cannot only verify a bent shaft condition, but can also help in identifying the nature and location of the bend as well.

5.8.3 IDENTIFYING A SHAFT WITH A KINK OR BEND CLOSE TO THE BEARING

The axial vibration caused by a bent shaft can actually occur in two different ways. Normally, if the bend is fairly close to a particular bearing, such as a. "kink" in the stub shaft of a motor of pump caused by bumping the shaft during transportation or installation, the bearing will tend to vibrate axially in a "twisting" motion. Taking comparative axial phase measurements at multiple axial positions as shown in Figure 5-7 can easily recognize this twisting motion. Four axial phase readings at each bearing of the machine are recommended; however, physical constraints may make it impossible to take all the readings desired. In any case, more than one axial phase reading is needed; so try to take as many as possible.

If the bearing is, in fact, "twisting" due to a kink in the shaft that is very close or actually through the bearing itself, the result will be a drastic difference in the phase readings obtained at the four axial positions, as shown in Figure 5-8. In Figure 5-8, it can be seen that the upper and lower measurement points (1 and 3) are actually 180 degrees out-of-phase, as are the measurement points on opposite sides of the shaft (2 and 4). This clearly indicates that the bearing is vibrating axially in a twisting fashion. Further verification of a bend or "kink" in the shaft can be carried out using a dial indicator.

Bearings that are "cocked" in the machine housing may also cause significant vibration amplitudes in the axial direction, and may reveal the same "twisting" action as that caused by a kinked shaft. However, a cocked or misaligned bearing can usually be distinguished from a kinked shaft by comparing the amplitudes of vibration measured at the four axial positions. Normally, if a bearing is cocked in the housing, it will be cocked in a specific direction and show a significant difference in the amplitudes measured at the four axial positions. On the other hand, a shaft that has a simple bend or "kink" will reveal fairly uniform amplitudes in the four axial positions.

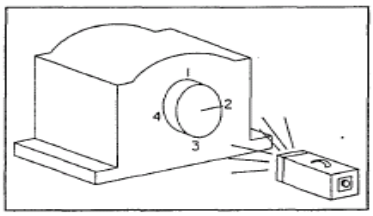

Figure 5-7: Four axial phase readings at each bearing are needed to see how each bearing is vibrating axially.

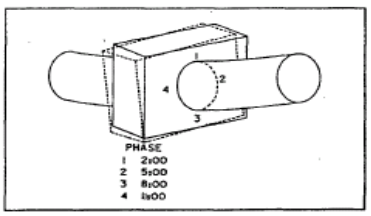

Figure 5-8: These axial phase readings show a “twisting” axial motion

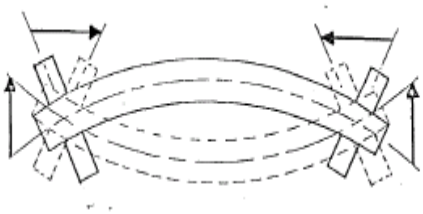

Figure 5-9: Shaft with a simple bow

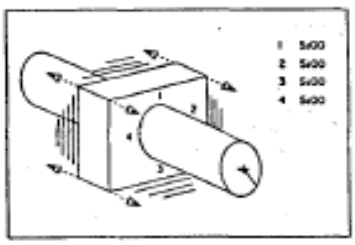

Figure 5-10: Axial phase measurements showing planer motion

5.8.4 IDENTIFYING A SIMPLE SHAFT BOW

A shaft that has a simple bow, such as that shown in Figure 5-9, may not cause the supporting bearings to vibrate axially in a "twisting" type of motion. Instead, a simple bow may cause the supporting bearings to vibrate axially in a "planer", fashion as shown in Figure 5-10. In this case, the axial amplitude and phase readings taken at the four positions around the shaft will be nearly the same, indicating a planer type of axial vibration.

In order to identify a simple bow as the cause of high axial vibration, it will be necessary to compare the "relative" axial motion of the support bearings. If the shaft is simply bowed, the supporting bearings of the rotor will reveal a substantial "out-of-phase" condition as illustrated in Figure 5-9. Although a pronounced bow may reveal as much as a 180 degrees difference in the axial phase of the rotor supporting bearings, an out-of-phase condition of only 90 degrees or more is significant enough to indicate a possible bow in the shaft. Run out checks with a dial indicator should be performed to verify the bent shaft condition-especially if the amplitudes of axial vibration far exceed 50% of the highest radial amplitudes.

When comparing the axial phase readings at the supporting bearings of a rotor, it is most important to keep in mind the direction of the transducer. To illustrate, when taking axial phase readings on the left side bearing of the rotor in Figure 5-9, the vibration transducer may have been pointing to the right. However, when axial phase readings were taken on the right side bearing, it may have been necessary to point the vibration transducer to the left. If this was the case, it will be necessary to correct the phase readings for one of the bearings by 180 degrees to compensate for the necessary 180-degree change in transducer direction. Of course, if the direction of the pickup axis can be kept the same at all bearing locations, then no correction factor is necessary.

5.8.5 VIBRATION DUE TO MISALIGNMENT

Surveys have shown that at the beginning stages of most predictive maintenance programs, misalignment of direct-coupled machines is by far the most common cause of machinery vibration. In spite of self-aligning bearings and flexible couplings, it is difficult to align two shafts and their bearings so that no forces exist which will cause vibration. Although machines may be well aligned initially, several factors can affect alignment, including:

1. Operating temperature: Machines aligned when cold may "grow" out of alignment due to variations in thermal conditions.
2. Settling of the base or foundation.
3. Deterioration or shrinkage of grouting

Figure 5-11 illustrates the three types of coupling misalignment: offset, angular and a combination of angular and offset misalignment. The vibration characteristics caused by coupling misalignment depend on the type of misalignment as well as the extent or degree of misalignment. The following are general characteristics to look for:

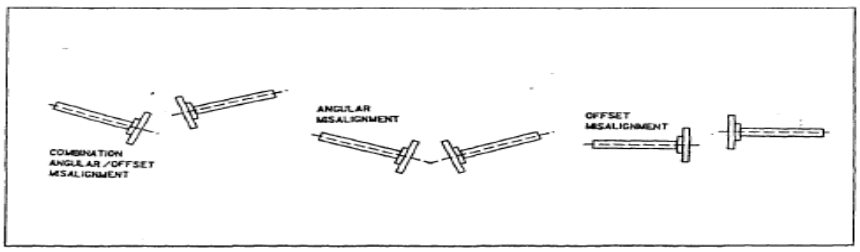

Figure 5-11: Three types of misalignment.

1. The forces resulting from coupling misalignment are usually "shared" by the coupled machine components. As a result, the amplitudes of vibration measured on the driver and driven units will be reasonably the same. Of course, differences in the mass and stiffness characteristics may result in slightly different amplitudes. However, the vibration is not typically localized to just one component.

2. The radial vibration caused by coupling misalignment is typically highly directional on both the driver and driven units. Misalignment occurs in a certain direction and, as a result, the radial forces are not uniformly applied in all radial directions like that from unbalance.

3. The vibration frequencies due to misalignment are usually 1x, 2x and 3x RPM, and may appear in any combination depending on the type and extent of misalignment. Angular misalignment normally causes vibration at 1 x RPM, whereas offset or parallel misalignment causes vibration predominantly at 2 x RPM. In fact, offset misalignment is probably the most likely cause of a predominate 2 x RPM vibration. Combinations of angular and offset misalignment may show combinations of 1 x and 2 x RPM and in some cases even 1 x, 2x and 3 x RPM.

4. Whenever misalignment is suspected, an axial phase analysis comparing the relative axial motion of the driver and driven units can be most helpful. As stated earlier, "for every action there is an equal but opposite reaction". As a result, misalignment problems will normally reveal a significant phase difference up to 180 degrees. However, phase differences as little as 60 degrees in relative axial motion are sufficient to suggest misalignment. Remember, when taking comparative axial phase measurements, it will be necessary to correct your phase readings by 180 degrees whenever it is necessary to reverse the direction of the vibration transducer from the first or original axial measurements.

5. An offset or parallel misalignment may not always show high amplitudes of axial vibration, especially on close-coupled machines. However, the fact that misalignment is the problem is fairly easy to recognize since first, the vibration is shared between the driver and driven units, and secondly, the radial vibration is generally highly directional. In addition, there are very few additional problems besides offset misalignment that cause vibration predominantly at 2 x RPM.

Of course other conditions of misalignment can exist that do not involve a coupling. One example is a rolling element bearing that is "cocked" in the housing due to distortion or errors in manufacturing or assembly. In this case, comparative axial amplitude readings taken at the four positions around the shaft will usually identify the problem because of the large discrepancy in amplitudes.

If a rolling element bearing is actually "cocked" on the shaft, as shown in Figure 5-12, the comparative amplitudes may be reasonably the same. However, the comparative phase readings will likely reveal a "twisting" type of axial motion, very similar to a shaft that is kinked or bent very close to the bearing.

Figure 5-12 shows a misaligned plain or sleeve-type bearing. Unlike rolling element bearings, misaligned sleeve bearings will rarely result in significant vibration unless there is an unbalance condition as well. An unbalance causes significant radial forces which, in turn, force the misalignment to create axial vibration. In fact, there have been many reported cases where high amplitudes of axial vibration caused by misaligned sleeve bearings have been significantly reduced by simply balancing the machine to much finer tolerances. However, the real cause of the high axial vibration is bearing misalignment, which should be corrected. If the bearing is

truly misaligned, rapid wear of the bearing will most likely occur, even though the amplitude of vibration might be improved by balancing.

Another condition of misalignment that produces high axial vibration is the misalignment of pulleys and sprockets used in "V" belts and chain drives. Figure 5-14 illustrates several examples of belt and pulley misalignment. These conditions not only result in destructive vibration, but cause accelerated wear of pulleys, sprockets, chains and belt drives.

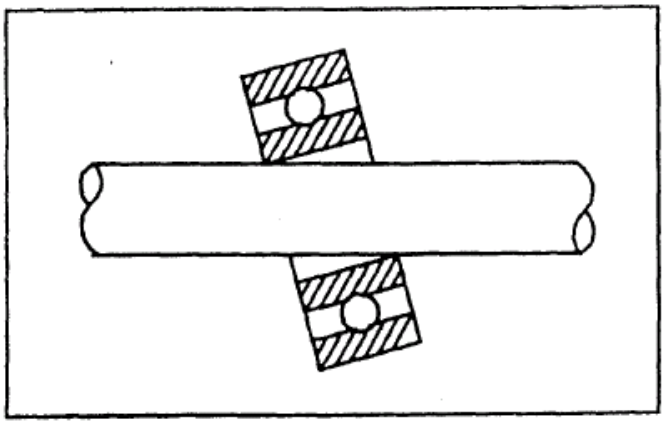

Figure 5-12: Misaligned rolling-element bearing and shaft.

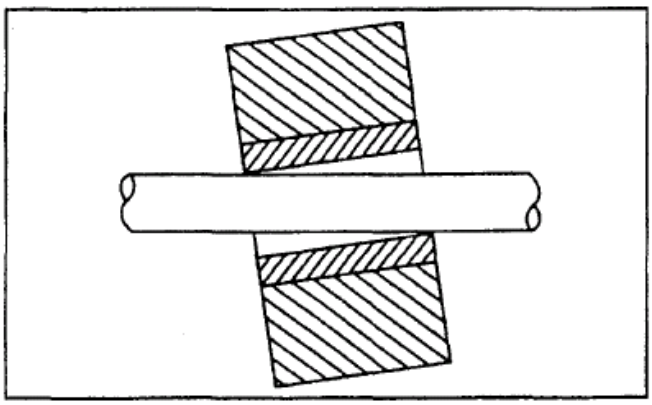

Figure 5-13: Misaligned sleeve bearing and shaft.

MISALIGNED SHEAVES

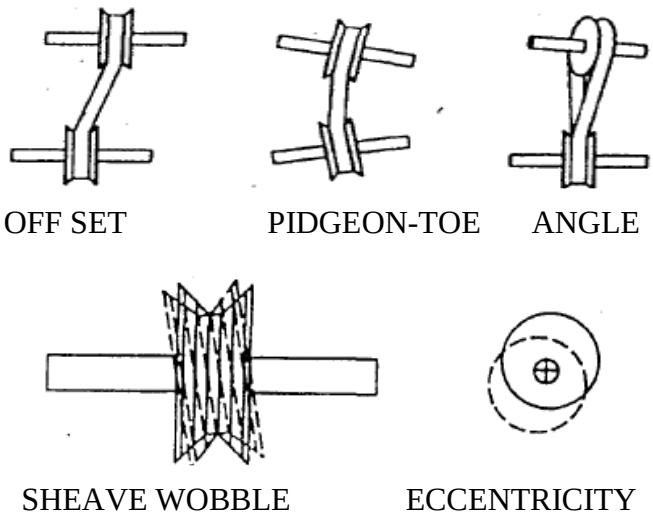

Figure 5-14. Examples of Misaligned pulleys

5.8.6 VIBRATION DUE TO LOOSENESS

Perhaps the first important thing to understand about vibration problems due to looseness is that looseness is NOT an exciting force. In other words, excessive vibration may exist due to looseness conditions; however, looseness is not the actual cause of the vibration. Some other exciting force such as unbalance or misalignment must be present to actually cause the vibration.

Looseness is simply a loss or reduction in the normal stiffness of the machine or system, perhaps due to loose mounting bolts, cracks in the base or foundation, deterioration in grouting, cracked welds, loose lags or anchors or rotors loose on the shaft. Looseness conditions simply allow whatever exciting forces exist in the machine to exhibit or generate higher amplitudes of vibration than they would if no looseness problems existed. If the predominate exciting force is an unbalance at 1 x RPM, then predominate vibration due to looseness would be 1 x RPM in this case. However, if the predominate exciting force is occurring at 2 x RPM due to an offset misalignment, then the looseness would occur at a frequency of 2 x RPM. Looseness does not have to occur at a frequency of 2 x RPM as many published vibration diagnostic charts would lead one to believe.

The term looseness is a very broad term and covers a wide range of possibilities. For our purposes here, two general types of looseness and their identifying vibration characteristics will be discussed. These include:

1. Looseness associated with the rotating system, including rotors loose on the shaft, bearings loose on the shaft or in the machine housing and excessive sleeve bearing clearance.
2. Looseness of the support system of a machine such as loose mounting bolts, grouting deterioration or cracks in the structure.

5.8.7 LOOSENESS OF THE ROTATING SYSTEM

Looseness associated with the rotating system, such as a rotor loose on the shaft, will usually result in a "rattling" condition or a series of "impacts" between various machine components such as the rotor rattling on the shaft. Or, in the case of a bearing loose on the shaft, perhaps due to a loose locking collar, rattling between the shafts and bearing. As discussed earlier, whenever impacts or spike-pulses occur, for whatever reason, the result, in terms of FFT frequency characteristics, will be multiple harmonic frequencies.

The fan analysis data in Figure 5-15 revealed a predominate vibration at 2200 CPM or 1 x RPM of the fan. However, multiple harmonically related frequencies are also present at 2 X RPM (4400 CPM), 3 x RPM (6600 CPM) and 4 x RPM (8800 CPM). These multiple frequencies were only evident at the drive end bearing "C" and were significant in all measurement directions. Ultimately it was discovered that the set screws securing the "V" belt pulley to the shaft had worked loose. Tightening the setscrews eliminated the looseness and the multiple harmonically related frequencies at 2x, 3x and 4 x RPM.

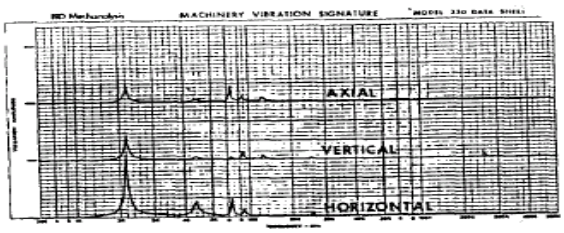

Figure 5-15: Typical tri-axial data taken on a belt-driven fan

Figure 5-16 shows a history of FFTs taken on a centrifugal pump. Note that the FFT dated 8-3-88 shows very little significant vibration. However, the FFT dated 10-6-88 shows a definite increase in the amplitudes and number of harmonically related vibration frequencies. The FFT dated 2-1-89 shows an even greater increase in the amplitudes of multiple frequencies. At this point, the pump was shut down, removed from service and disassembled for inspection. As a result, it was found that the shaft had been turning in the bearing raceway and, as a result, the diameter of the shaft had actually worn down nearly 1/4 inch creating an obvious looseness condition. After building up the shaft and replacing the bearing, a follow-up FFT, dated 3-21-89, reveals that the looseness condition has been corrected.

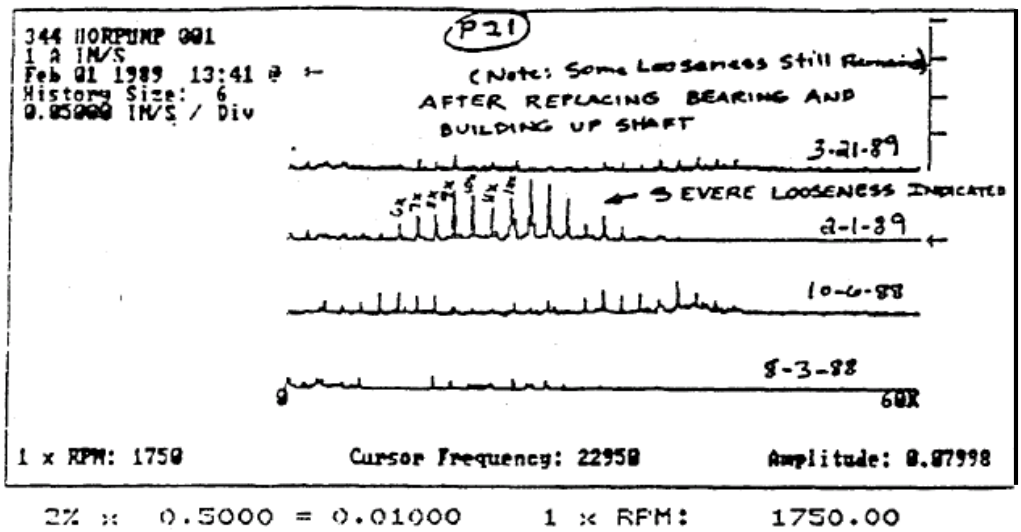

Figure 5-16: The multiple harmonic frequencies are the result of a shaft loose in the bearing raceway

5.8.8 LOOSENESS OF THE SUPPORTING SYSTEM

Unlike looseness associated with the rotating system, looseness of the machine support system may not reveal multiple, harmonically related vibration frequencies. Whether or not multiple harmonic frequencies are generated, depends on not only the severity of the looseness condition, but the intensity of the machine's inherent exciting forces as well.

For example, a motor that has been well balanced may operate quite smoothly simply sitting, unbolted, to the shop floor or test bed. However, by adding a little unbalance, the motor may vibrate significantly and actually "walk" around the foundation if unrestrained. Looseness conditions of the machine supporting system such as loose mounting bolts, deterioration of grouting or cracks in the structure or foundation can usually be identified by the following vibration characteristics:

1. Structural looseness accompanied by only moderate exciting forces such slight unbalance or misalignment, may reveal only predominate exciting force frequency with no apparent harmonics. However, because there is looseness, the radial vibration will typically be highly directional, and may show unusually high vertical amplitude. Normally, for rigidly mounted machines, vertical amplitude that is equal or greater than the horizontal amplitude is a good indication of structural looseness or weakness.

2. If structural looseness exists, combined with a significant exciting force such as unbalance, the combination of the two conditions may result in a "bouncing" condition. To explain, Figure 5-17 shows a bearing with loose mounting bolts together with a

significant unbalance. When the unbalance force is directed downward, the bearing is forced downward against the base. However, when the unbalance force has rotated to the upward direction, the force of unbalance actually lifts the bearing up to the extent of looseness. The bearing is held in this position until the unbalance force has rotated to a position where its upward lifting force can no longer hold the bearing up. At this point, the bearing will drop and bounce against the base. The net result is a "distortion" of the unbalance sine wave as shown. As discussed earlier, any time a vibration signal deviates from a sinusoidal or "sine" waveform, multiple harmonic vibration frequencies will be evident in the resultant FFT.

Here also, additional evidence of a structural looseness condition will be indicated by its highly directional nature along with abnormally high amplitude of vertical vibration compared to the horizontal vibration.

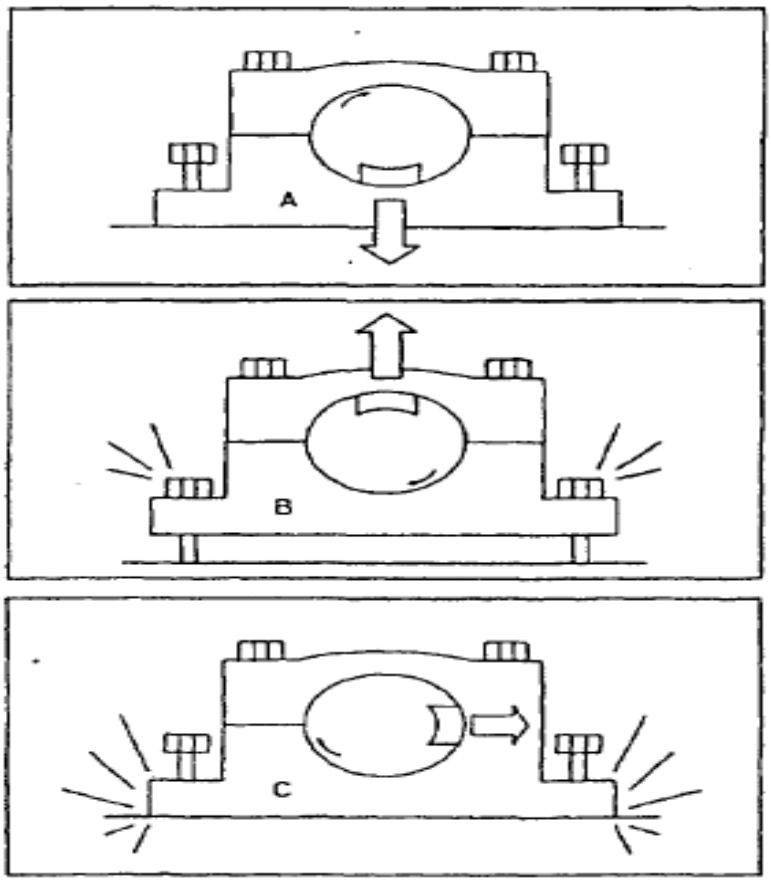

Figure 5-17. Mechanical Looseness combined with a significant exciting force can result in bouncing

5.8.9 MECHANICAL LOOSENESS AND SUB HARMONIC FREQUENCIES

On occasion, certain looseness conditions can also result in "sub harmonic" frequencies of vibration (i.e. 1/2, 1/3, or 1/4 x RPM) with frequencies at 1/2 x RPM being the most common. For example, there have been many reported cases of excessive wear and clearance in sleeve bearings of large motors that have resulted in vibration frequencies of 1/2x, 1x, 1-1/2x, 2x, 2-1/2x, 3x, 3-1/2x and higher orders of 1/2 x RPM. Why and how vibration frequencies at multiples of half-order (1/2 x RPM) are generated has never been fully explained. However, when detected, possible looseness conditions, including bearing clearance problems, should be

suspected.

5.8.10 VIBRATION DUE TO ECCENTRICITY

Of course, no rotor or shaft can be made perfectly round. Some eccentricity or "out of roundness" will be present on nearly every rotating assembly. Eccentricity is a common cause of unbalance, and for common machines such as fans, blowers, pumps, etc., normal balancing procedures can be carried out to minimize the effects of eccentricity. However, in certain situations, eccentricity can result in "reaction" forces that cannot be totally compensated by simply balancing the rotor. Probably the most common examples are eccentric belt pulleys and chain sprockets, eccentric gears and eccentric motor armatures. Figure 5-18 illustrates these common sources of eccentricity along with eccentric bearings. Eccentric bearings are rarely a cause of excessive vibration because of the precision with which bearings are normally manufactured. However, in the case of machine tools, where extremely low vibration tolerances are needed, simply changing a bearing may result in a significant vibration increase because of variations in bearing tolerances.

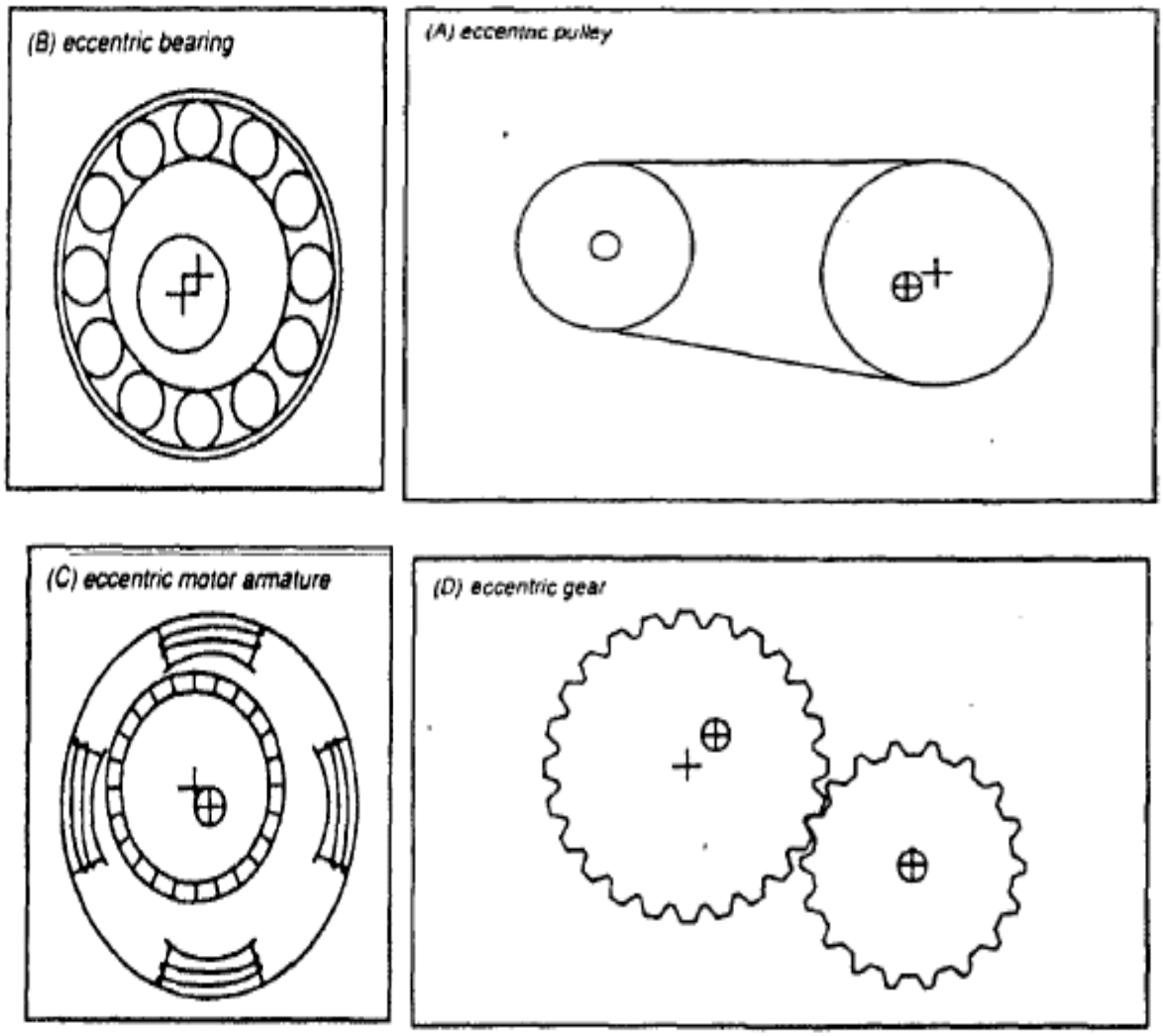

Figure 5-18. Sources of eccentricity

In the case of an eccentric belt pulley or chain sprocket, each revolution of the eccentric pulley or sprocket will cause a variation in belt or chain tension. The result will be a vibration frequency at 1 x RPM of the eccentric element, with a directional force on a line between the

centers of the driver and driven pulleys or sprockets. Although this could be easily mistaken as an unbalance problem, a simple test for the directionality of the radial vibration by taking comparative horizontal and vertical phase readings or by taking multiple radial amplitude readings will quickly reveal the highly directional nature of the vibration. Slow motion studies with a stroboscopic light or run out checks with a dial indicator will confirm the eccentricity problem.

Eccentric gears will cause highly directional vibration at 1 x RPM of the eccentric gear in a manner similar to that of eccentric belt pulleys and chain sprockets, and can be identified by taking comparative horizontal and vertical phase readings or by taking multiple radial amplitude readings. If balancing is attempted on machines with eccentric gears, pulleys or sprockets, the results will be less than satisfactory. In many cases, balancing a rotor in the horizontal direction will only cause the vibration to increase in the vertical direction and vice versa. Therefore, the recommended procedure for in-place balancing of belt, chain or gear driven machines, where eccentricity may be a problem, is to perform the balance calculations with data taken from BOTH the horizontal and vertical directions. If the vibration problem is truly unbalanced, the computed solution for the balance correction should be the same for the horizontal and vertical directions. If the calculated answers are significantly different, unbalance is probably not the problem.

Eccentricity of induction motor armatures is another case where balancing will not solve the eccentricity problem. An eccentric armature of an induction motor will result in a variation of the rotating air gap between the motor armature and magnetic field (stator). Although the motor armature can be successfully balanced to compensate for the unequal distribution of rotor weight, balancing will NOT solve the problem of a variable rotating air gap. As the air gap between the armature and stator varies with rotation of the eccentric armature, the magnetic forces between the armature and stator also vary with rotation, causing an unbalance in the magnetic forces. These forces cannot be compensated by balancing the rotor. Additional information on identifying induction motor problems, including armature eccentricity, is presented later under "Induction Motor Problems".

5.8.11 VIBRATION DUE TO RESONANCE

Every object, which includes every element or part of a machine, has a "natural frequency" or a frequency at which "it likes to vibrate". Striking a bell or guitar string causes it to vibrate at its natural frequency. The natural frequency of every object is determined by its mass (weight) and stiffness characteristics. Increasing the mass or weight of an object reduces or lowers its natural frequency. Increasing the stiffness of an object, such as tightening a guitar string, increases or raises its natural frequency.

The fact that every part or element of a machine has a "natural frequency", based on its mass and stiffness characteristics, is not a problem in itself. However, a problem of excessive vibration can result if a machine component has a natural frequency that just happens to be the same as or close to some exciting force frequency inherent to the machine. When this happens, the problem is called "resonance". From a vibration standpoint, resonance acts as a mechanical amplifier. Even minor or normal exciting forces such as unbalance, misalignment, aerodynamic/hydraulic forces, electrical forces in motors etc. that would normally result in little or no significant vibration may result in extremely high vibration amplitudes if they excite a resonance condition.

Resonance is a very common cause of excessive vibration on machines because:

1. Machines consist of many individual elements or components such as suction and

discharge piping, bearing pedestals, bases, and accessory items such as exciters and lube oil pumps, etc. Of course, each component has its own mass and stiffness characteristics and, hence, its own unique natural frequency.

2. The stiffness of each machine component is different in different directions. As a result, each machine component will likely have several different natural frequencies. For example, consider a fan bearing. Most likely, the stiffness of the bearing will be different in the horizontal, vertical and axial directions. As a result, the natural frequencies of this particular machine component will also be different in the horizontal, vertical and axial directions.

When one considers all of the various machine components, along with the multiple natural frequencies possible for each component, the reason that resonance is such a common problem is quite understandable. All that is required is that the natural frequency of one machine component, in one of its directions of vibration, be the same as one exciting force frequency inherent to the machine. When this happens, resonance and high levels of vibration will result. Although machines that are installed and brought into service may not exhibit resonance problems initially, resonance may become a problem in the future if changes in machine stiffness occur as the result of bearing wear, grouting deterioration, loosening of mounting bolts or other problems.

5.9 IDENTIFYING RESONANCE

Since the natural or resonant frequency of a machine component is dependent on its stiffness, and since the stiffness of machine components generally differs in the various directions of vibration measurement, resonance problems will usually cause highly directional vibration. For example, the tri-axial vibration data taken on the outboard bearing of the motor driven fan revealed a vibration amplitude at 1 x RPM in the horizontal direction that was almost ten (10) times higher than that measured in either the vertical or axial directions. This was, in fact, the result of a resonance condition where the bearing had a natural frequency in the horizontal direction equal to the unbalance frequency of 1 x RPM.

5.10 VERIFYING RESONANCE PROBLEMS

Whenever a resonance problem is suspected, there are several simple checks that can be performed to prove that the problem is, in fact, a resonance condition. These additional checks include:

1. **Change the exciting force frequency.** The amplitude of resonance problems depends on the exciting force frequency being close to the component natural frequency. In other words, the amplitude of resonance vibration is "frequency dependent", and small changes in the exciting force frequency will normally result in significant changes in the vibration amplitude. Therefore, if possible, change the RPM of the machine and note the effect on the amplitude of vibration. If relatively small changes in machine speed cause large changes in vibration amplitude, the problem is very likely a resonance.

2. **Change the mass or stiffness of the suspected resonant** machine component. Making changes in the mass or stiffness of a machine, structure or other system component to test for and possibly correct a resonance problem is a rather straightforward procedure. Temporary mass changes can be made by simply adding sand bags, concrete blocks or other suitable weights to a suspected resonant machine component, to verify the results before an expensive, permanent solution is carried out. In one instance, a forklift truck

was driven onto a resonate equipment floor to test the effect of a mass change. The added mass of the truck drastically reduced the amplitude of floor vibration and plant engineering refused to allow the truck to be moved until a permanent solution could be made. Similarly, temporary changes in stiffness can be made by adding wood or metal braces, jacks, etc. Once the solution is proven to work, more permanent braces can be fabricated and bolted or welded in place.

3. **Perform a bump test on the suspected component.** Perhaps of the easiest and least expensive ways to verify a resonance problem is with a bump or impact test. Any object which is struck or bumped will vibrate at its natural frequency. Good examples would be a bell, tuning fork or guitar string. Of course, the natural frequency excited by the impact will eventually decay or die away due to damping. Repeated impacts, however, can sustain the natural frequencies for whatever time is needed to perform a frequency analysis (FFT) to identify the system's most significant natural frequencies.

To perform a bump test, simply shut down the machine being analyzed and apply the vibration transducer to the location and direction of the suspected resonance. With the vibration transducer in place, bump in the machine with the force sufficient to cause it to vibrate at a level above the level of any background vibration. Devices suitable for bumping the machine include rubber, rawhide or plastic mallets or a large piece of lumber. DO NOT use metallic objects such as a sledge hammer as these tend to excite only localized natural frequencies and not the system natural frequencies. In addition, striking the machine with metallic objects may results in extensive damage to the machine.

When the machine is bumped, the system natural frequencies will be excited. However, because of damping, the resonant vibration will quickly die away. For this reason, it will be necessary to bump the machine repeatedly in order to sustain the vibration for whatever period of time is necessary to perform the needed frequency (FFT) analysis. For best result, it is recommended that the machine be bumped at rate 1 or 2 impacts / seconds to not only sustain the resonant frequencies, but to sustain them at reasonably constant amplitude.

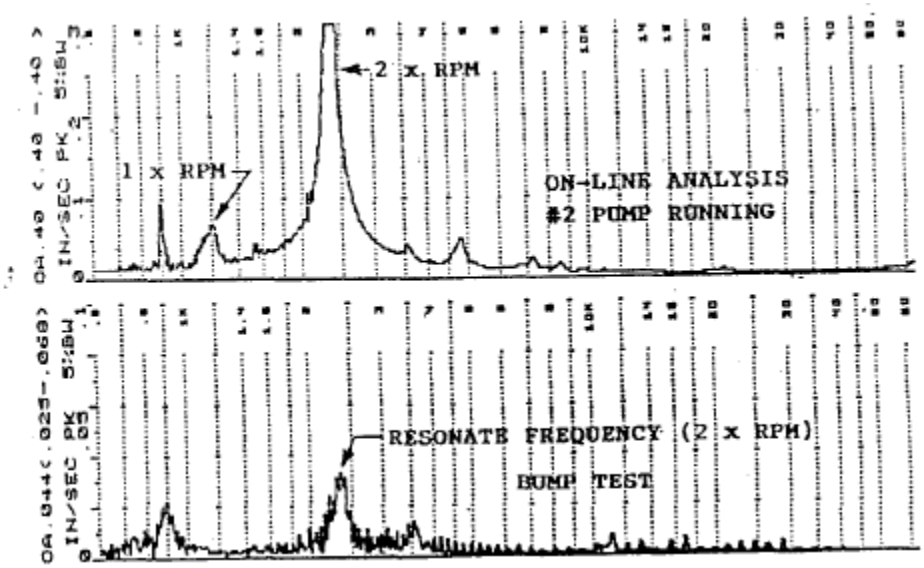

Figure 5-19: Bump test data confirming piping resonance

Figure 5-19 shows vibration analysis data and bump test data taken on the discharge piping of a vertical pump. Because the piping had extremely high amplitude of vibration, highly directional in nature, piping resonance was suspected. The frequency of vibration was 2400 CPM or 2 x RPM which was the normal discharge pulsation frequency for this particular pump.

The bump test data clearly shows the natural frequency of the piping at 2400 CPM. This is clearly a resonance problem.

5.11 VIBRATION DUE TO DEFECTIVE ROLLING-ELEMENT BEARINGS

When a rolling-element bearing develops flaws on the raceways and/or rolling elements, there are actually a number of vibration frequency characteristics that can result, depending on the extent of deterioration. Thus, identifying these characteristic frequencies can not only help to verify that a bearing is definitely that a bearing is defiantly failing, but can also give some indication of the extent of deterioration? The following is a discussion of the four stages that a bearing will typically go through from the earliest stage of deterioration to that approaching catastrophic failure. Catastrophic failure is defined here as simply the total inability of the bearing to perform its intended functions of minimizing the friction generated through rotating motion and keeping rotating and non-rotating parts from coming into contact with one another. In other words, failure will occur when either the bearing literally comes apart or seizes due to excessive heat buildup.

5.11.1 Stage One-There's a Visible Flaw

At the first stage of bearing failure, a defect has developed on a raceway or rolling element that, upon examination, would be visibly detectable to the naked eye. Since the defect is relatively small at this first stage, the only indication is a significant increase in SPIKE ENERGY. At this early stage of deterioration, no significant changes are noted in overall acceleration or velocity amplitudes, nor will a frequency analysis reveal any significant characteristics. At this stage, the most appropriate action would be to shorten the interval between periodic checks.

5.11.2 Stage Two-It's Getting Worse

As bearing deterioration progresses, the size of the flaw increases and, thus, the intensity of the impact forces increase as well. As a result, SPIKE ENERGY (gSE) values will continue to increase. In addition, at stage two, the intensity of the impact forces has increased sufficiently to excite the ringing "natural" frequencies of the various bearing components including the inner raceway, outer raceway, cage, rolling elements, etc. These bearing natural frequencies generally occur within a frequency range from approximately 20,000 CPM to 150,000 CPM (333 Hz to 2500 Hz) regardless of bearing size or machine RPM.

The vibration velocity signature in Figure 5-20 is very typical of a bearing that has reached the stage 2 level of deterioration. This analysis data was obtained on the bearing of a centrifugal pump operating at 3600 RPM. The overall SPIKE ENERGY reading is 1.7 gSE, which would be considered VERY ROUGH. The overall vibration velocity reading of 0.15 in/sec, on the other hand, would generally be considered acceptable. The bearing problem is verified, however, by the velocity' frequency spectrum that reveals a somewhat erratic band of vibration over a frequency range from approximately 20,000 CPM to 120,000 CPM. The erratic or "haystack" appearance is not unusual since the impacts generated by the bearing defects will actually excite numerous bearing components to "ring" at various intervals, frequencies and intensities. Whether or not the "haystack" includes frequency components over the entire range from 20,000 CPM to 150,000 CPM will depend, in part, on the extent of bearing deterioration. Typically, a small range of frequencies will appear first. Then as deterioration continues, the "haystack" will begin to spread out, covering a wider and wider frequency span.
Another point that needs to be mentioned is that the amplitudes of the ringing resonate

frequencies are not typically very high, and rarely exceed 0.1 in/sec.

Once a stage two level of deterioration is confirmed, the machine should be shut down and the bearing replaced at the earliest opportunity. Normally, the worse a bearing gets, the more rapidly it gets worse. If the machine cannot be shut down, even more frequent checks should be made, perhaps once every few hours, in order to judge the rate of deterioration.

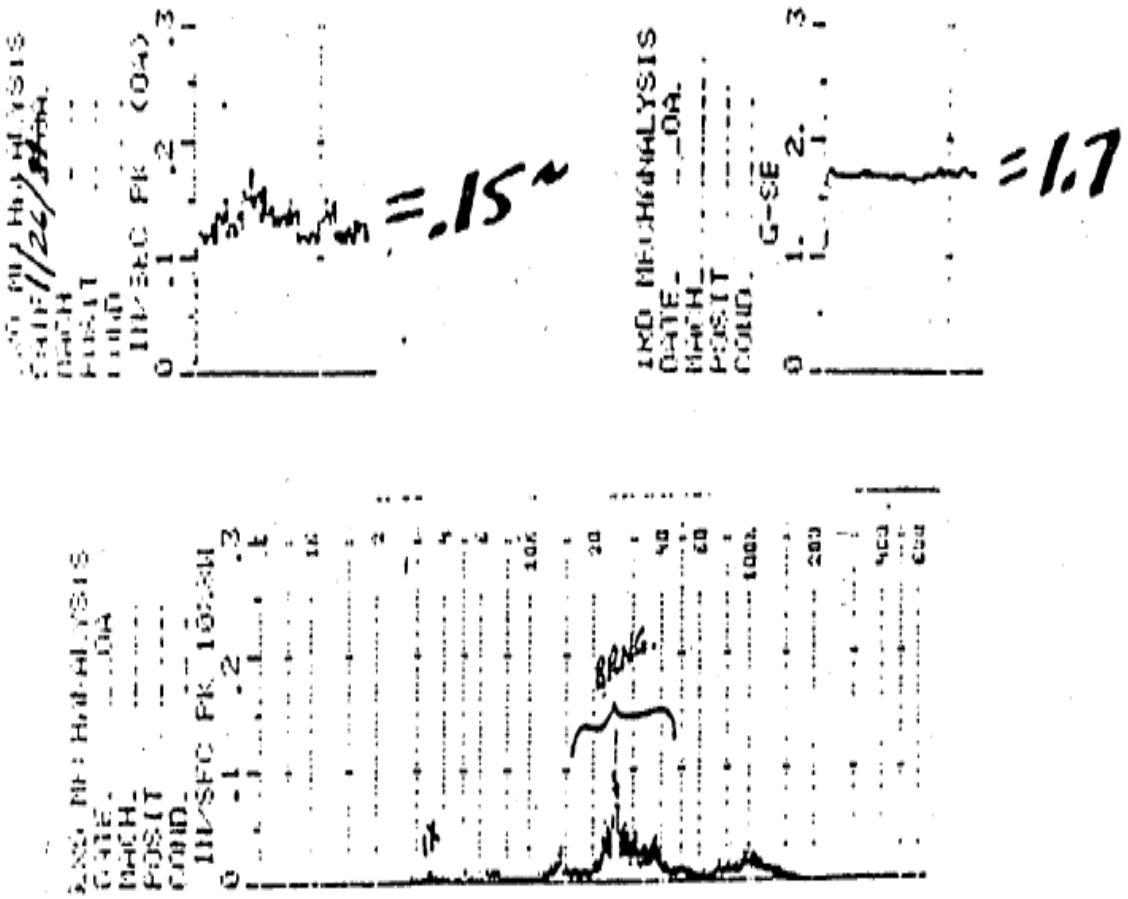

Figure 5-20: The ringing natural frequencies normally appears as a "haystack" between 20, 000 and 15, 000 CPM

5.11.3 Stage Three - It's Really Bad

At stage three, SPIKE ENERGY (gSE) readings will continue to increase, and the "haystack" of ringing natural frequencies will likely spread out, covering more of the frequency range between 20,000 CPM and 150,000 CPM. In addition, characteristic of stage three will be the appearance of specific bearing defect frequencies in the velocity frequency analysis (FFT) data. There are four-types of bearing defect frequencies:

1. The ball passing frequency for the outer raceway (BPFO)
2. The ball passing frequency for the inner raceway (BPFI)
3. The actual rotating speed of the balls or rollers, referred to as the ball spin frequency (BSF)
4. The rotating speed of the cage or retainer, referred to as the fundamental train frequency (FTF)

These bearing defect frequencies can actually be calculated if the number of rolling elements, bearing pitch diameter, rolling element diameter, contact angle and machine RPM are known.

The needed equations are given in Figure 5-21.

Although the specific bearing defect frequencies can be calculated, this is rarely necessary since most reputable bearing manufacturers and suppliers will provide this information upon request. In addition, there is a number of software bearing "libraries" available that typically include literally thousands of bearings from various bearing manufacturers. If the machine RPM is known, a specific bearing defect frequency can be found by simply multiplying the RPM times the appropriate defect frequency multiplier. For example, assume that a machine rotating at 3600 RPM has an SKF N220 bearing, and it was necessary to determine the ball passing frequency for the outer raceway (BPFO). From the tables, it can be found that the BPFO multiplier for this particular bearing is 6.86. Therefore, the BPFO is simply 3600 RPM times 6.86 which equals 24,696 CPM. This would be called the "fundamental" outer raceway defect frequency.

Figure 5-22 shows FFT data taken on a paper machine press roll bearing that had severe damage on the outer raceway. The roll rotates, at 158 RPM and the cursor frequency of 1410 CPM is the calculated outer race passing frequency.

Since bearing defects generate vibration in the form of impacts, the fundamental bearing defect frequencies will often be accompanied by multiple harmonically related frequencies as well. This can be seen in the analysis data in Figure 5-16 which shows many harmonics of the outer race frequency. Generally speaking, the more harmonic frequencies there are, the worse the bearing condition.

Of course, inner raceway defects will generate frequencies different from outer defects. In addition, inner raceway bearing defects will normally be accompanied by "side-band" frequencies spaced above and below the bearing defect frequencies at plus and minus machine RPM.

Like the ringing resonant frequencies, the amplitudes of the specific defect frequencies are rarely very high. An amplitude as low as 0.05 in/sec of a BPFO or BPFI may indicate a bearing has extremely severe deterioration. In general, when specific bearing defect frequencies begin to appear in the velocity spectrum (FFT), the machine should be shut down for immediate bearing replacement. Continued operation may result in catastrophic failure in a very short time.

Rolling Element Bearing Defect Frequencies

These equations assume the inner race is rotating with the shaft while the outer race is fixed (stationary).

INNER RACE =	BPFI=	$N_b/2(1+B_d \cos Ø/P_d)$ x RPM
OUTER RACE =	BPFO=	$N_b/2(1-B_d \cos Ø/P_d)$ x RPM
BALL ROLER =	BSF =	$P_d/2B_d\,[1-(B_d \cos Ø/P_d)^2]$ x RPM
CAGE =	FTF =	½ $(1- B_d \cos Ø/P_d)$ x RPM

N_b = Number of balls or Rollers

B_d = Balls or Roller Diameter (inch. or mm)

P_d = Bearing Pitch Diameter (inch. or mm)

Ø = Contact Angle (degrees)

Figure 5-15: Equations for calculating specific bearing defect frequencies

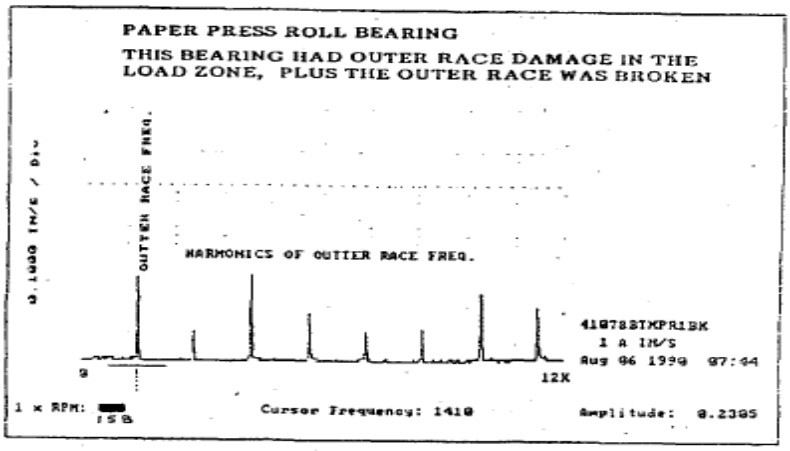

Figure 5-21: Pressrollbearing with outer race frequencises dueto sever damge to the outerraceway

5.11.4 Stage Four-The Last Hurrah

Stage four is the final stage of bearing deterioration just before total failure. In many cases, a failing bearing may never exhibit the vibration and SPIKE ENERGY characteristics of stage four. During stage three, excessive heat buildup may cause the bearing to seize. Or, in the case of inner raceway defect, the raceway may have split. Of course, if the raceway splits, eliminating the normal interference fit, the shaft may actually spin within the race, causing the shaft to gall and break.

If and when a bearing reaches a stage four level of deterioration, the SPIKE ENERGY levels may actually decline. The decline in SPIKE ENERGY at stage four is attributed to a process referred to as "self-peening". The edges of the raceway or rolling element defects begin to round off, which actually reduces the intensity of the impact forces. Metal which has been removed from the various bearing components, may actually fill in some of the more severe flaws and be smoothed over by rolling elements. However, during this process, the clearances within the bearing are beginning to increase substantially, creating a significant looseness condition. The result will be a noticeable increase in overall vibration velocity amplitudes.

Concerning frequency analysis (FFT) data, at stage four, the "haystack" will continue to spread out and may actually extend below 20,000 CPM. Since stage four is actually a looseness condition associated with the rotating system, multiple harmonics of 1 RPM, similar to that shown in Figure 5-10 will be evident.

At stage four, total, catastrophic failure of the machine could occur within a matter of minutes.

5.12 VIBRATION DUE TO AERODYNAMIC HYDRAULIC PROBLEMS

Vibration problems caused by aerodynamic and hydraulic forces in fans, blowers and pumps are easy to recognize because the resultant vibration will occur at a frequency which is the product of the number of fan blades or impeller vanes times machine RPM. For example, if a pump impeller with 7 vanes rotates at 3600 RPM, the vane passing frequency will be 3600 RPM times 7 vanes or 25,200 CPM (3600 CPM x 7 = 25,200 CPM).

It is not unusual to detect some vibration at the vane or blade passing frequencies on nearly every fan or pump. Just like it would be impossible to perfectly balance or align a machine, it would be impossible to build a machine where no hydraulic or aerodynamic forces were present. However, when the amplitude of aerodynamic or hydraulic vibration is excessive or has shown a significant increase, a problem is indicated.

Whenever excessive or a significant increase has been detected in the vibration amplitude at the blade or vane passing frequency, the following possibilities should be considered:

1. **Resonance:** As discussed previously, any exciting force frequency can serve to excite the natural frequency of a machine or some machine component. Aerodynamic and hydraulic pulsation vibration frequencies are not excluded from the list of possibilities. If the problem is, in fact, resonance, the vibration will typically be highly directional in nature. Refer to the discussion of resonance for additional tests such as bump tests that can be carried out to verify whether or not the problem is truly resonance.
2. **Manufacturing errors:** Simply because a machine is new does not necessarily mean that it is manufactured or assembled correctly. In fact, one example involved three identical centrifugal pumps that exhibited high amplitudes of vibration at the vane-passing frequency and dimensional inspection revealed that the impellers were 0.080-inch off-center relative to the stationary diffusers, creating an unbalance in the hydraulic pulsations.
3. **Piping and duct configuration:** Sometimes high amplitudes of vibration at the vane or blade passing frequencies may simply be the result of the design features of the inlet or discharge piping or fan ductwork. Sharp changes in the flow direction of fluids (liquids or gasses) will generally result in flow turbulence and vibration. Although the vibration may have high amplitudes at the vane or blade passing frequencies, random vibration at both low and high frequencies may be present as well. Elbows immediately adjacent to the suction or discharge of fans and pumps should be avoided whenever possible. To illustrate, a 90-degree elbow located directly at the suction flange of a centrifugal pump may cause a variation in the pressure and flow velocities of the fluid entering the "eye" of the impeller. This variation in fluid velocity and pressure causes vibration at the vane or blade passing frequency. Some industry performance standards for fans and pumps require that elbows in piping and ductwork be located at certain distances from the machine in order to avoid such vibration problems. For example, the American Petroleum Institute (API) performance standard for centrifugal pumps (API Standard 610) requires that suction (inlet) piping elbows be no closer than five times the diameter of the inlet piping. In other words, if the inlet diameter is ten (10) inches, then the elbow should be no closer than 10 x 5 or 50 inches downstream on the suction side of the pump. This will allow the flow velocity and pressure of the fluid to stabilize before entering the eye of the pump impeller.
4. **Design capacity:** Fans, blowers, pumps and other fluid-handling machines are normally designed to operate at certain flow conditions including suction and discharge pressures, flow rates (volume), head pressures, product density or specific gravity, etc. If operated beyond or outside these designed parameters, high amplitudes of vibration generally result. For example, pumps that are forced to operate well below their designed capacity will experience "cavitations". Operating below designed suction pressure, the pump is essentially "starved" and the amount of fluid that enters the pump is insufficient. This creates vacuum pockets in the fluid that are unstable and can collapse or implode. Due to their "impactive" nature, these implosions excite the natural frequencies of various machine components in much the same way as the impacts from bearing defects. In fact, cavitations often causes a "hay stack" of random vibration frequencies in the 20,000 CPM to 150,000 CPM frequency range, just like defective rolling-element bearings. However, the vibration caused by a defective bearing is typically localized to a specific bearing, whereas cavitations will not be localized to a specific bearing but will show up at all measurement locations on the pump. In fact,

readings can be taken directly on the pump housing to verify that the problem is, in fact, cavitations and not a bad bearing.

From the above discussion, it should be obvious that there are many possible causes of high amplitudes of hydraulic and aerodynamic pulsation frequencies on fluid-handling machines such as fans, blowers, pumps, compressors, etc., and it is beyond the scope of this text to cover the details of each possible cause. In general, however, the following checks will usually identify the specific cause:

1. Check to be sure that the machine is operating within designed parameters of flow, volume, product density, specific gravity, etc.
2. Check the dimensional tolerances of the machine, especially on new or rebuilt units.
3. Check to make certain there are no obvious flow obstructions. If the pump has strainers on the suction side or the fan has filters, make sure that they are clean and free of obstructions.

If the above checks, along with tests for possible resonance, fail to identify the cause of high amplitudes of "flow-induced" vibration, it may be necessary to shut the unit down for further inspection to detect problems such as pump wear- ring problems, broken diffuser vanes, etc.

5.13 VIBRATION DUE TO INDUCTION MOTOR PROBLEMS

Induction motors are probably the most common drivers used for industrial machinery. For this reason, some of the more common vibration problems unique to induction motors will be covered here. Of course, there are other types of drives including synchronous motors, variable frequency (VFD) drives and variable speed DC motors, to name only a few. However, to attempt to cover the unique problems and resultant vibration a characteristic of each type of drive is well beyond the scope of this text.

In addition to the normal mechanical problems of unbalance, misalignment, distortion, looseness, etc.; induction motors can also have significant vibration due to "electrical" problems. Although such problems are normally referred to as "electrical" problems, the causes are actually mechanical in nature and result in unbalanced magnetic forces between the motor armature and field or stator. Such problems can be divided into armature or stator (field) related problems, and can be easily distinguished by their individual vibration characteristics, as will be explained in the paragraphs to follow.

Typical armature problems that result in unbalanced magnetic forces include:

1. Cracked or broken rotor bars
2. Armature eccentricity: Even though the armature may have been balanced, armature eccentricity will result in an unequal rotating air gap, creating unbalanced magnetic forces.
3. Shorted laminations (iron): Perhaps a previous bearing failure has allowed the armature to rub.

Typical field or stator problems that result in unbalanced magnetic forces include:

1. Unequal air gap between the armature and stator: This could be the result of manufacturing errors, improper adjustment or worn sleeve bearings.
2. Shorted stator laminations (iron), perhaps due to a rotor rub
3. An elliptical stator bore

4. Operating off axial magnetic center
5. Unbalanced phases on 3-phase systems
6. Open or shorted Windings
7. Loose connections

Although armature problems can be distinguished from stator or field related problems by their distinct vibration characteristics, pinpointing a specific problem, such as one of the possible field problems listed above, may not be possible using vibration data alone. Once the armature or field has been identified as the cause of an electrical vibration, additional electrical and physical tests are usually required to positively pinpoint the specific cause.

5.13.1 TEST FOR ELECTRICAL PROBLEMS UNDER LOAD

When testing motor vibration for possible electrical problems, the motor must be operating under a reasonable load. Some motor experts suggest that the motor be tested at a load of at least 75% of its maximum rated load.

The amplitudes of vibration from unbalanced magnetic forces depend on the magnetic strength of the field, which, of course, is governed by motor current. A motor operating solo simply doesn't have sufficient magnetic field strength to reveal potently serious electrical problems.

5.13.2 TEST FOR ELECTRICAL PROBLEMS AT NORMAL OPERATING TEMPERATURE

Some electrical problems may not show up on initial startup when the motor is cold. Cracked or broken rotor bars or loose connections may only appear after thermal expansion. In addition, a motor armature may bow at operating temperature to create the effect of an eccentric rotor.

5.13.3 DISTINGUISHING BETWEEN MECHANICAL AND ELECTRICAL VIBRATION

The first step in identifying electrical problems on induction motors is to verify that the vibration is, in fact, electrical in nature and not a mechanical problem such as unbalance or misalignment.

Since the magnetic field must be "induced" through the armature across an air gap, some energy will be lost and the armature simply can't keep up with the rotating magnetic field. As a result, induction motors always have a "slip" frequency, which is the difference between the electrical frequency of the magnetic field rotating in the stator and the actual rotating speed of the armature. For example, the rotating speed of the magnetic field in a 2-pole motor is exactly AC line frequency or 3600 RPM (60 Hz). If the armature was turning at 3550 RPM, the slip frequency would be 50 CPM (3600 - 3550 = 50). With a 4-pole motor, the magnetic field rotates at exactly 1/2 of AC line frequency or 1800 CPM (30 Hz). Therefore, a 4-pole motor operating at 1750 RPM would have a slip frequency of 50 CPM also (1800 - 1750 = 50). The actual slip frequency for any induction motor depends on the load-the greater the load, the higher the slip frequency will be.

From the above discussion, it should be apparent that the vibration frequencies generated by mechanical and electrical problems could be very close. For this reason, it is most important that when the FFT spectral parameters of F_{max} and the number of lines of resolution are selected, that they be selected to make it possible to separate these frequencies. To illustrate, assume that an FFT with an F_{max} of 120,000 CPM and 400 lines of resolution was taken on the 3550-RPM motor described above. With these FFT parameters, each line of resolution would

be 300 CPM wide (120,000 CPM/400 lines = 300 CPM). Under these conditions, it would be impossible to separate or distinguish between mechanical and electrical frequencies.

5.13.4 VIBRATION DUE TO FIELD (STATOR) PROBLEMS

To explain the vibration characteristics caused by field or stator problems, consider a motor with an unequal air gap problem, Figure 5-22. In this case, the armature is noticeably closer to the motor pole on the bottom. Each motor pole is being el, with a peak positive and a peak negative value. The diametrically opposed poles are wound in such a way that they are energized at equal magnetic strength but opposite in polarity. In other words, when the upper motor pole is energized at a peak positive (+) current value, the lower or opposite pole is being energized at a peak negative (-) current value. This keeps the magnetic strength of the opposing motor poles balanced or equal, and if the armature was centered between the motor poles, there would be no radial unbalance of the magnetic forces between the armature and stator. However, since the armature in Figure 5-22 is closer to the lower pole, the magnetic attraction between the lower pole and the armature will be greater than that between the armature and upper pole. The result will be vibration with the following distinct characteristics:

1. Since each cycle of AC current passing through the motor poles actually has two peak values, one positive (+) and one negative (-), each pole will be at maximum magnetic strength twice for each cycle of AC current. In other words, the frequency of vibration will be two times AC line frequency or 7200 CPM (120 Hz). Of course, this assumes that AC line frequency is 3600 CPM (60 Hz).
2. The vibration frequency of two times AC line frequency is usually the pre-dominant vibration encountered with electrical problems, especially stator problems. This characteristic frequency is totally independent of the number of motor poles or whether the motor is single-phase or three-phase. In other words, whether the motor is a 2-pole (3600 RPM), 4-pole (1800 RPM), 6-pole (1200 RPM), etc., makes no difference. A 7200 CPM frequency will be predominant. - Figure 5-23 shows an FFT taken on a 2-pole motor with a stator problem. Note that the predominant vibration is 7200 CPM or two times AC line frequency. Note also that a vibration at a frequency of 7173 CPM is also present, which is actually 2 x RPM of the motor, perhaps the result of a slight misalignment problem. This example further illustrates how close mechanical and electrical frequencies can be and the need for high resolution in the FFT data to see the difference.
3. In addition to the predominant 7200 CPM frequency, stator problems will often show significant vibration at the frequency of the rotating magnetic field. Figure 5-24 shows an FFT taken on a 4-pole motor. The vibration frequency at 1755 CPM is the actual RPM of the armature. The higher frequency is 1800 CPM, which is the rotating speed of the magnetic field of a 4-pole motor.

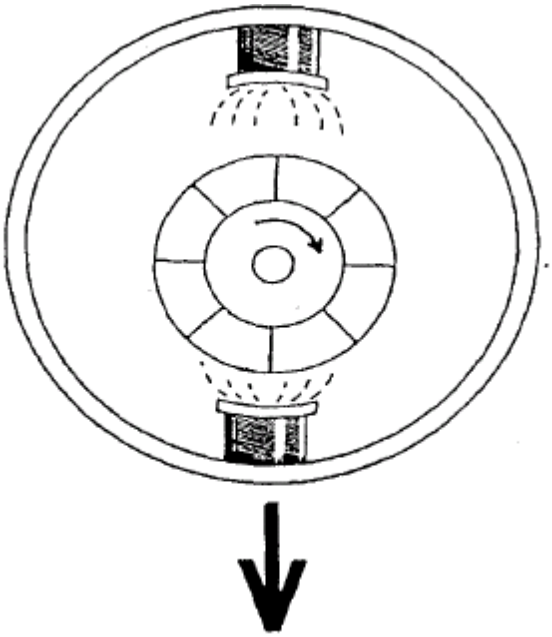

Figure 5-22: Motor with un-equal Air-gap.

4. Another characteristic of field or stator problems is that they are typically highly directional in nature, which is not the case with armature problems. To explain, the problem with the motor in Figure 5-17 is a vertical air-gap problem. As a result, the unbalanced magnetic forces will occur in the vertical direction and the resultant vibration will be in the vertical direction as well. Because of their directional nature, it is recommended that high resolution FFT data be taken in at least the horizontal and vertical directions at one bearing of each induction motor included in a predictive maintenance program and for detailed analysis.

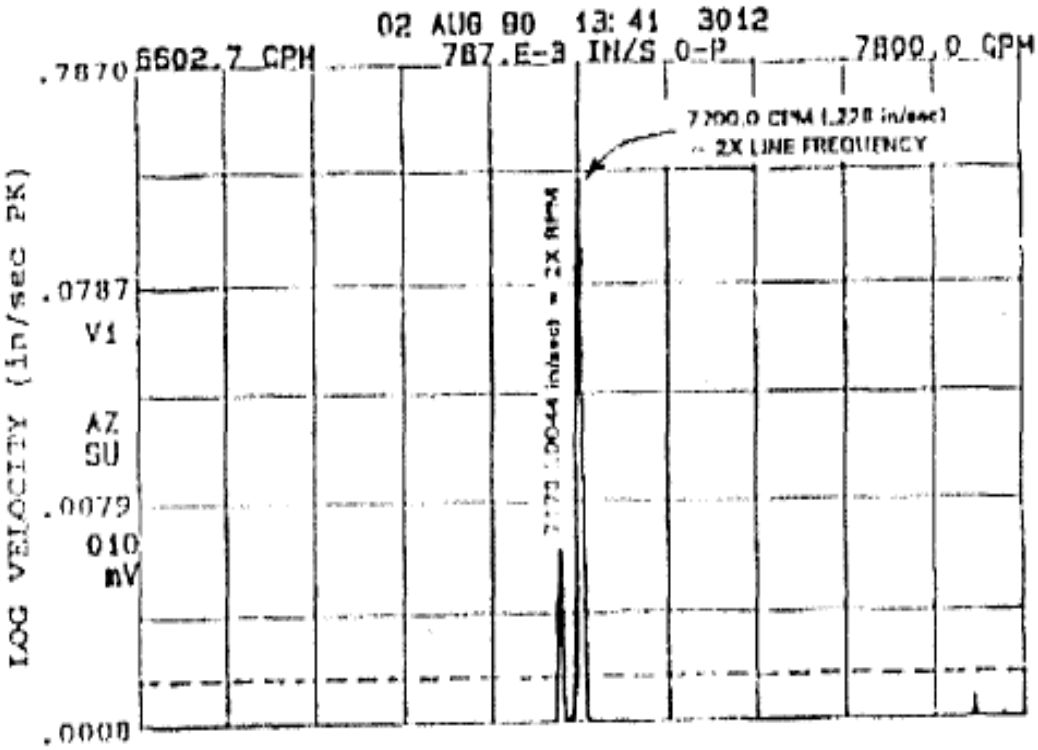

Figure 5-18: The vibration 7200 CPM is caused by an electrical Field Problem

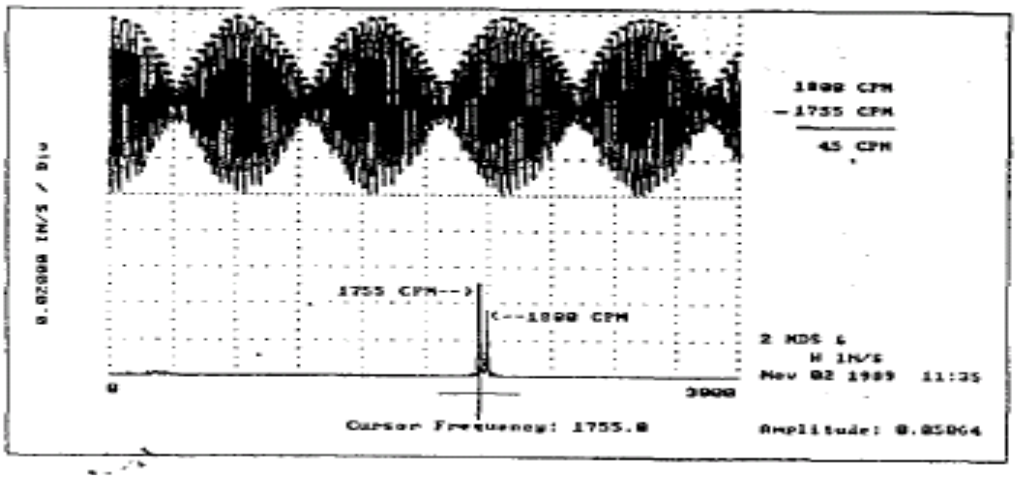

Figure 5-23: Field Problems may also vibration at the frequency of the rotating magnetic field

5.13.5 VIBRATION DUE TO ARMATURE PROBLEMS

Armature problems, listed above, also cause unbalanced magnetic forces. However, the resultant vibration characteristics will be different than those caused by field problems.

Figure 5-24 illustrates an armature with a cracked or broken rotor bar. Since this rotor bar is defective, the magnetic forces between it and its diametrically opposed "good" rotor bar will not be balanced whenever they are lined up with the motor poles when they are energized at their maximum magnetic strengths. However, the amount or level of "magnetic unbalance" force depends on where the armature defect is in its rotation relative to the rotation of the magnetic field. Remember that an induction motor always has "slip."

Assume that the motor in Figure 5-24 is operating at 3550 RPM, which means that the magnetic field is rotating at 3600 RPM. The slip frequency in this case is 50 CPM. In Figure 5-24 (A), the rotor bar is lined up with the lower motor pole when it is energized at maximum magnetic strength. At this instant, the unbalanced magnetic force will be at its maximum level. However, the next time the lower pole is at its maximum magnetic strength, the cracked rotor bar will not be perfectly lined up as it was previously because of slip. In this case, the rotor bar will be 1/50 revolution behind the magnetic field, and since it is not perfectly lined up with the motor pole at its maximum strength; the unbalanced magnetic forces will be reduced slightly. As the armature continues to "slip" relative to the magnetic field, the unbalanced magnetic forces will decrease with each succeeding revolution of the magnetic field until. When the rotor bar has slipped to a point midway between the motor poles as shown in Figure 5-24 (C), the unbalanced magnetic forces between the armature and field will be at their minimum or lowest level. Then, as the broken rotor bar begins to "slip" toward the opposing (upper) motor pole, the unbalanced magnetic forces will begin to increase.

From the above explanation, it can be seen that armature problems create a vibration that varies in amplitude dependent on the slip frequency between the rotating speed of the armature and magnetic field. It can also be seen from this example, that the unbalanced magnetic forces are at peak levels whenever the armature has slipped so that the armature defect is lined up with a motor pole when it is at its maximum magnetic field strength. For the two-pole motor above, the amplitude was at its peak level twice for each slip cycle.

From the above discussion, the following conclusions can be made concerning the vibration characteristics associated with armature problems with induction motors.

1. Armature problems such as cracked or broken rotor bars or a bowed or eccentric rotor

always cause pulsating vibration amplitude. If severe, this low frequency pulsation can often be heard and felt. Stator problems may or may not cause pulsating vibration amplitude.

2. The rate or frequency of the pulsating vibration from armature problems is equal to the slip frequency multiplied by the number of motor poles, since the amplitude will peak each time the armature has slipped to line up with an energized motor pole. This pulsating frequency is called the "pole-passing frequency". A 2-pole motor operating at 3550 has a slip frequency of 50 CPM. For this motor, pole-passing frequency would be 100 CPM (50 CPM slip x 2 poles = 100 CPM). A 4-pole motor operating at 1750 RPM would also have a slip frequency of 50 CPM. However, the pole passing for the 4-pole motor would be 200 CPM (50 CPM slip x 4 poles = 200 CPM)
3. The "pole-passing" frequency characteristics of armature problems are a "modulating" frequency at which the amplitude of the unbalanced magnetic forces varies. As a modulating frequency, it will appear as "side-band" frequencies in the FFT spaced above and below other inherent frequencies of motor vibration. Figure 5-25 shows an FFT taken on a 2-pole motor with severe rotor bars problem. The vibration at 3576 CPM is 1 x RPM of the motor, perhaps due to slight unbalance. The peak at 3600 CPM is AC line frequency and the rotating speed of the magnetic field on this 2-pole motor indicating unbalanced magnetic forces and electrical problems. The frequencies at 3526 and 3626 CPM are pole-pass side-band frequencies spaced above and below 1 x RPM. The peaks at 3478 and 3674 CPM are harmonics of the pole-pass side-band frequencies. The presence of multiple harmonics of pole-pass side-band frequencies is usually indicative of severe armature problems.

The pole-pass side-band frequencies caused by armature problems can appear as side-band frequencies spaced above and below other common frequencies besides 1 x RPM. They may appear as side-bands around 2x, 3x or 7200 CPM frequencies as well. Wherever they appear as side-bands, problems with the armature are clearly indicated

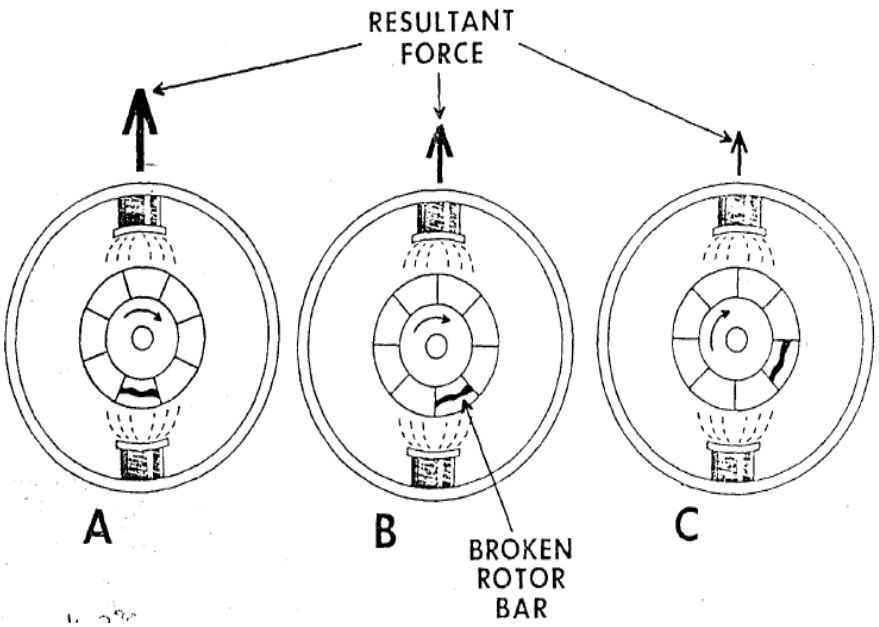

Figure 5-24: Induction Motor with broken rotor bar

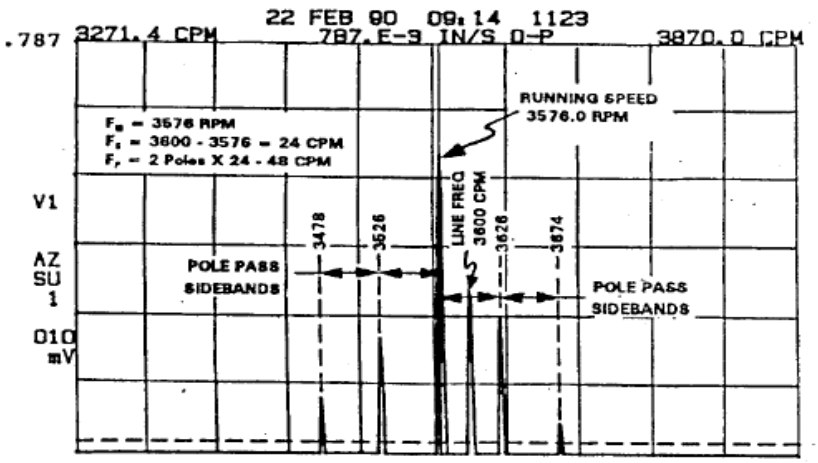

Figure 5-25: The "pole-pass" sidebands clearly indicate an armature problem

5.14 VIBRATION DUE TO GEAR PROBLEMS

The identification of possible gear problems is fairly easy since the most common vibration frequencies will be equal to or harmonics of the "gear-meshing" frequency which is the product of the number of gear teeth times RPM. For example, the fundamental gear meshing frequency for a gear with 100 teeth turning at 3600 RPM will be 360,000 CPM (100 teeth x 3600 RPM = 360,000 CPM).

Of course, it is impossible to manufacture perfect gears in terms of tooth profiles, concentricity and meshing characteristics. As a result, it is not unusual to identify some gear-related vibration on nearly every gear drive system. However, if the vibration at gear frequencies or multiple harmonics of gear meshing frequencies is considered excessive, compared to industry standards, analysis should be carried out to identify possible causes for correction, not only to avoid failure, but to increase the service life as well.

The following is an outline of some of the more important aspects regarding the analysis of gears and gear drive systems:

1. Experience has shown that significant gear problems such as gear wear, gear misalignment and excessive backlash may not cause a significant increase in the vibration at the fundamental gear-mesh frequency. In many cases, gear problems will cause a more significant increase at a multiple or harmonic of the fundamental gear-mesh frequency such as 2x or 3x the fundamental gear-mesh frequency. For example, the FFT data presented in Figure 5-26 was taken on a gear driven lubrication pump of a lobe-type compressor. The fundamental gear-mesh frequency is 29,925 CPM and is identified on the FFT as 1 x OPMF which means one times the oil pump meshing frequency. The most significant or predominant frequency in this case, 59,565 CPM or two times the oil pump gear meshing frequency.

2. Gear problems not only cause vibration at frequencies, which are equal to, and multiple harmonics of gear mesh frequencies, but will often be accompanied by "side-band" frequencies spaced above and below the gear frequency at the rotating speed(s) of the gears at fault. In Figure 5-26, for example, the predominant gear vibration occurs at 2 times the fundamental gear meshing frequency of 59,565 CPM. In addition, this gear frequency is surrounded by numerous side-band frequencies spaced at the rotating speed of the oil pump high-speed pinion gear. This clearly indicates that the pinion gear and not the low speed bull gear is the problem gear.

If both gears were defective or if the gears were misaligned, then side-band frequencies at both the low speed and high-speed gear RPMs would likely appear. In other words, the side-band frequencies can actually help pinpoint the gear(s) responsible for the problem.

3. Other mechanical problems such as gear case distortion or bearing wear may result in vibration at gear mesh frequencies and their harmonics. Therefore, when a significant gear vibration is detected, be sure to check for other mechanical problems that might be responsible before condemning the gears.

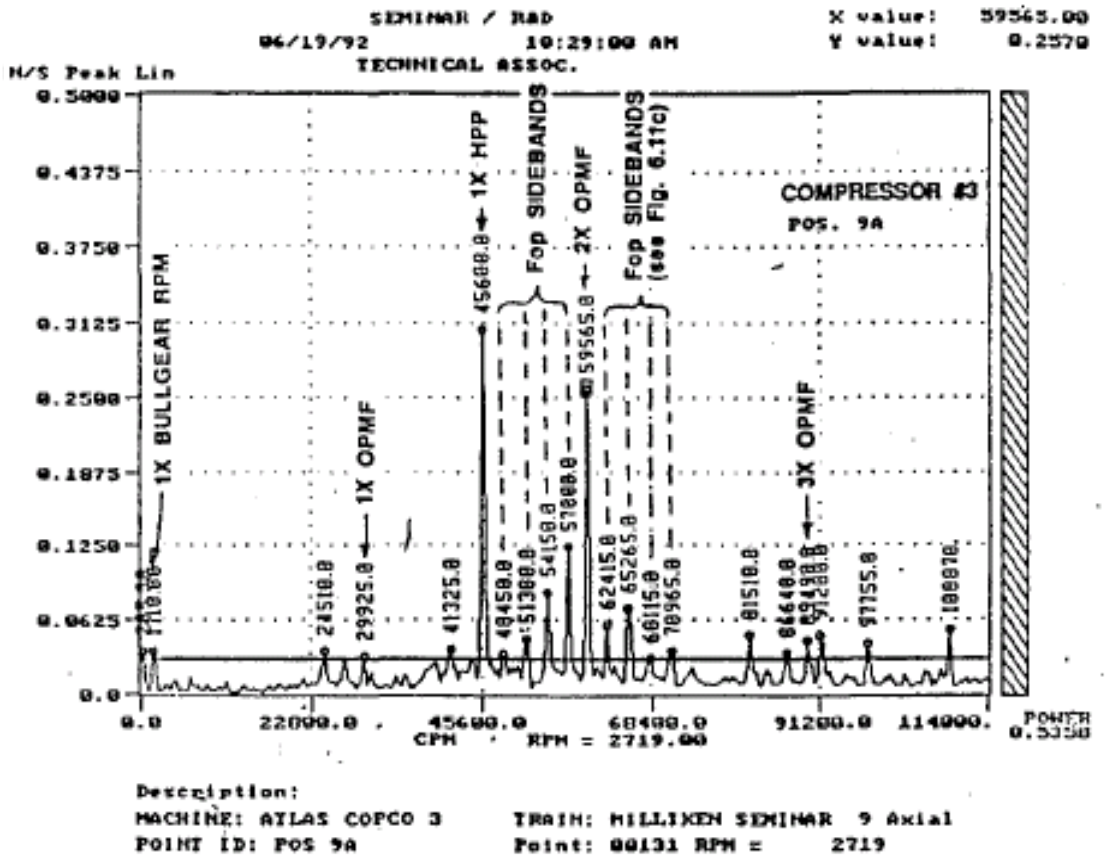

Figure 5-26: Gear Problems may cause vibration at harmonics of the fundamental gear mesh frequency.

4. Gear problems such as gear wear or excessive backlash that cause high impact forces between the gear teeth can excite the "ringing" natural frequencies of the gears, shafting, bearings and other machine components. The result can be a "hay stack" of random, high frequency vibration in the 20,000 CPM to 150,000 CPM frequency range-very similar to that caused by the impacts generated by defective rolling element bearings. However, unlike bearing problems, where the high frequency vibration is localized to a specific bearing, gear problems are not localized and typically show up at all bearing locations.

CHAPTER 6 SETTING ALARM LIMIT

Why are you doing vibration analysis?

In this section we will discuss alarm criteria but before doing this we really need to understand why we are collecting vibration readings and what we hope to achieve. The answers to these questions will dictate the type of hardware and software you buy (which will also dictate the alarm options you have), how you test your machines and how you determine the success of your program.

Here are some reasons why people collect vibration readings. Take a moment and see if you know which use you wish to make of this technology.

- Condition monitoring / predictive maintenance
- Simple alarming
- Troubleshooting (reactive maintenance / no machine history)
- Acceptance testing
  - Contractual
  - New machines
  - Overhauls
- Compliance
  - Insurance
  - Regulators
- Protection systems
- Other?

6.1 ISO Standard for setting alarms:

6.1.1 ISO 10816 RMS Alarm Limits

The ISO 10816 defines vibration severity as the RMS level of vibration velocity measured over a frequency range of 3 Hz to 1000 Hz.

Instead of measuring the amplitude of a transient at a single high frequency, the vibration severity reading represents an average of all vibration components within a wide and comparatively low frequency range.

Every moving machine vibrates but at different amplitudes from each other. To define its normal vibration level, one has to consider:

- The function of the machine and the forces involved
- The rigidity of the machine structure.

A large diesel engine vibrates more than a small electric motor, because different forces are involved. A machine on a stiff concrete foundation vibrates less than the same machine bolted to a flexible metal frame, because its overall structure is more rigid. Excessive machine vibration on new machines is a sign of inherent structural weakness or bad resonance characteristics. An increase in the vibration level from good condition has basically three causes: something is loose, misaligned, or out-of-balance.

Should a large machine have the same alarm levels as the smaller machine? The obvious answer is no.

The ISO 10816 Standard does address this issue and breaks the Alarm Limits into 5 general categories plus sub categories.

The 5 parts of the ISO 10816 standard are:

- Part 1: General guidelines
- Part 2: Large land-based steam turbine generator sets in excess of 50 MW
- Part 3: Industrial machines with nominal power above 75 kW and nominal speeds between 120 r/min and 15000 r/min when measured in situ
- Part 4: Gas turbine driven sets excluding aircraft derivatives
- Part 5: Machine sets in hydraulic power generating and pumping plants

The ISO 10816.1 General Machines severity chart has limits for four classes of machines. The alarm limits are in Velocity and shows the values in both metric and imperial units. Note that both are RMS values.

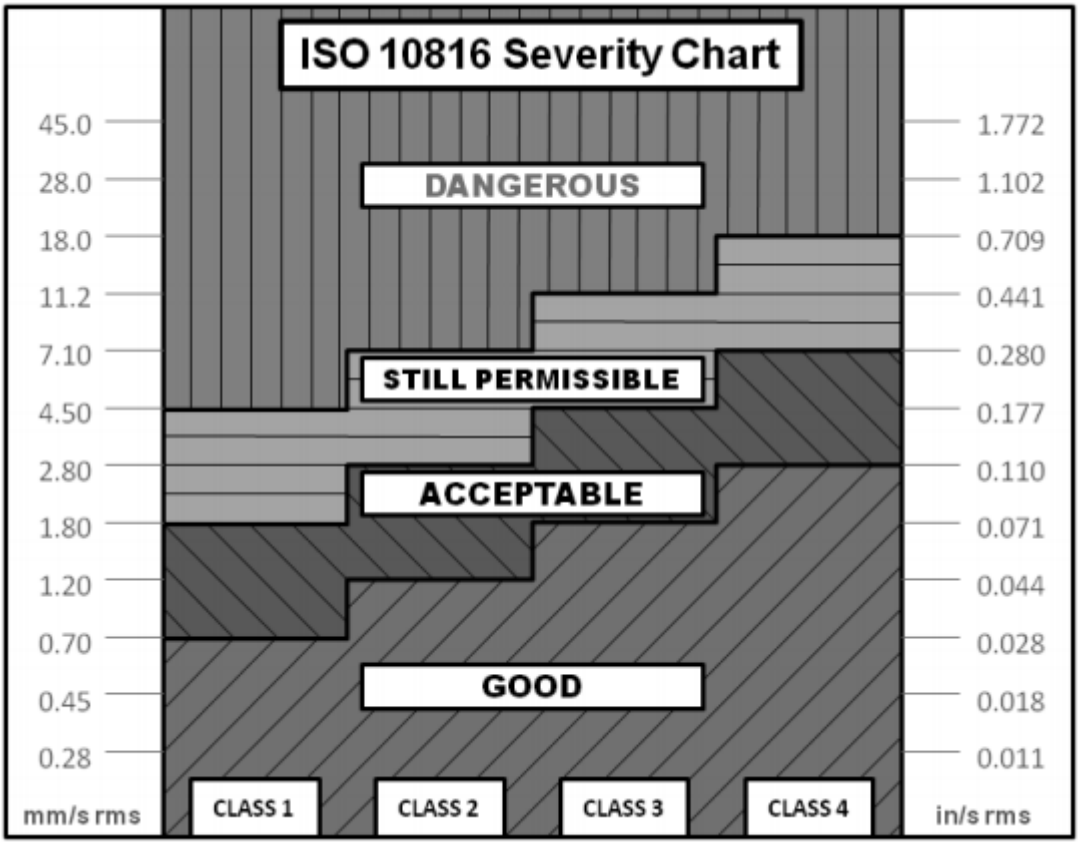

The ISO standard number 2372/10816 provides vibration amplitude acceptance guidelines for machinery with operating speeds from 10 to 200 revolutions per second (600 to 12000 RPM).

The ISO standard classifies a medium size machine (15-75kW) as being "good" if the overall RMS vibration level is between 0.18 to 1.12 mm/second (.007 to 0.042 Inch/Sec or 85 to 100VdB).

Part 3 of the ISO 10816 Standard is for Industrial Machines. There are charts for displacement values and for Velocity values. The chart for Velocity values is shown in below Figure.

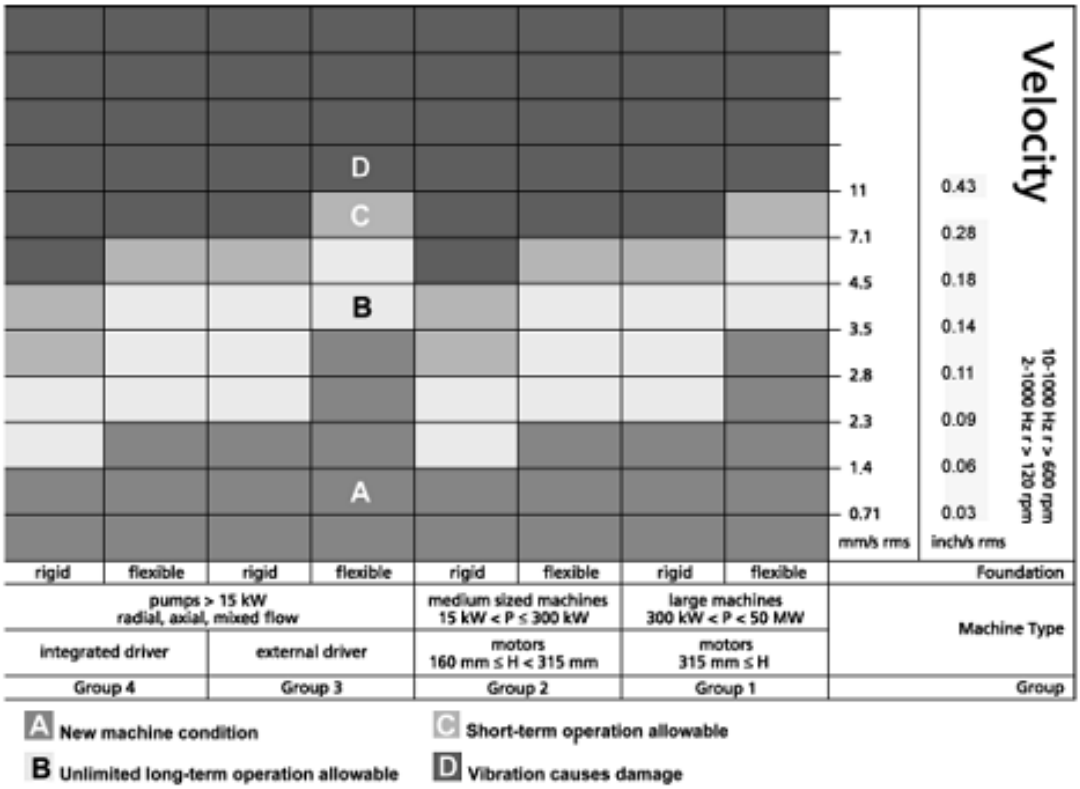

The chart for Displacement values is shown in below figure.

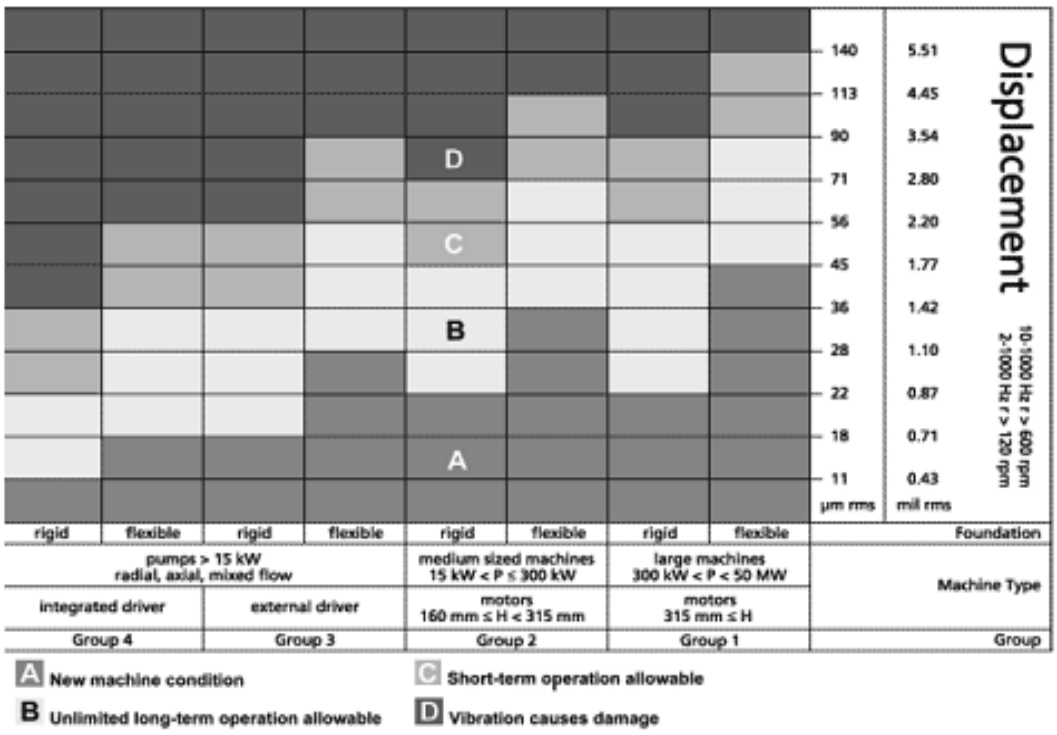

The machines are grouped according to size and whether they are flexible or rigid.

6.2 Spectrum Alarm Limits

The Overall value is a good number to trend. But it does not catch everything. It does not let us know about small amplitude values that may indicate severe or critical conditions. A better method is to have the system scan particular regions of the spectrum, and compare against a level for that region.

Several questions need to be answered.

- Which method should be used…Band, envelope, or statistical?
- What should the limit be…an absolute value or a relative value?

That may depend upon the capabilities of your software, or what you are comfortable with.

But a reference is still needed to compare against - particularly when starting out. There are basically two ways to set a reference alarm level. The first is to utilize published alarm limits and set fixed alarm limits, and the second is to start with existing vibration readings and perform a calculation to derive the alarm limit.

6.2.1 Band Alarms:

This is an area where the approach taken is largely dictated by the software package being used. In brief, there are "band alarms", "envelope (or mask) alarms", "expert systems" and "artificial intelligence systems". This course covers the band alarms and the envelope alarms.

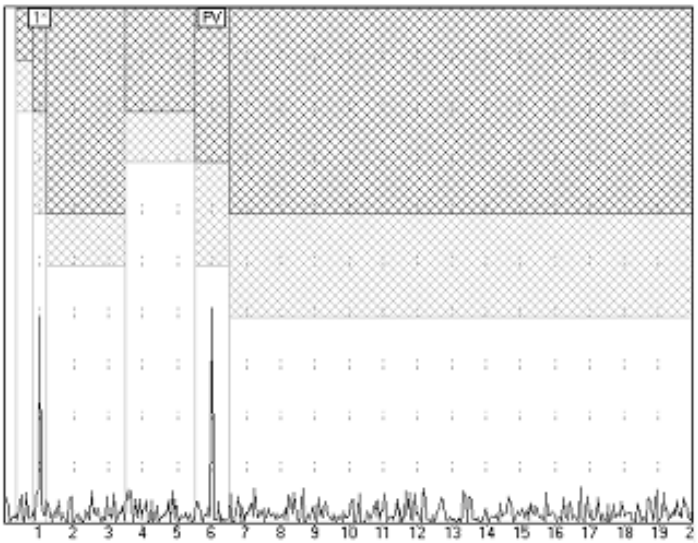

Figure 8-22 Six to twelve bands may be available for setting alarms. Bands are often defined by Analysis Parameter Sets.

Simply put, band alarms work on the principle that it is possible to consider different portions of the spectrum, and different scalar measurements (overall readings, bearing measurements, etc.) and apply different alarms to each band.

For example, in a spectrum, one band could be created around the running speed peak. The software will focus on the vibration level between 0.9X to 1.1X, for example. The software will look at the vibration in that frequency band and compute the maximum level, an average level, the RMS level, or some other parameter and see if it exceeds a limit.

The same technique is also applied to other "scalar" data such as overall readings, waveform pk-pk readings, crest factor calculations, bearings measurements and other useful parameters.

The band can be given a special name, for example "1X", "Running speed peak", "Unbalance", or whatever the user prefers. The limits applied are also typically user selectable; either fixed limits, or limits that are computed statistically. It is also common for the user to be able to set more than one limit per band, for example an "alert" limit and a "fault" limit.

Six or twelve bands may be available for use in this way (the exact number available is set by the software package), and the bands may cover narrow frequency ranges (1X, 2X, 3X, etc.) or broader ranges 1-10X, 0.2X - 0.8X (sub-synchronous), 10X-50X, and so on.

How it works:

If the amplitude of the peak increases to the point that it crosses over the alarm level, the band limit will be exceeded and the alarm triggered.

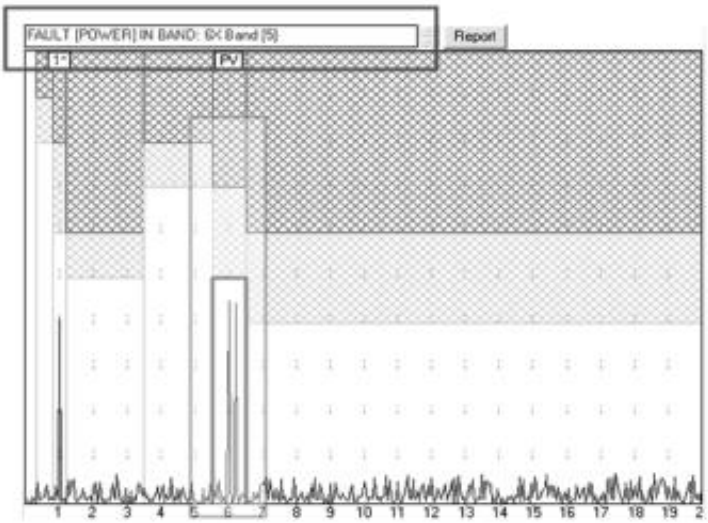

The alarm can be set up in a way that also measures the total Power in the band. This means that if the total energy of the peaks is at a certain level, a “power” alarm will be triggered although no peaks have crossed the actual alarm level. See above figure.

6.2.2 Band Frequencies

Most software packages offer at least 6 frequency bands for the spectral data. Each band has a minimum (Fmin) and maximum frequency (Fmax). Companies who use the products have tweaked the bands to work well with their machinery. One of these companies is General Motors. The chart graph below (Figure) shows the frequency bands typically used although there is quite a bit of variation after the third band.

Common settings include:

- Band 1: (sub-synchronous): 0.3 – 0.8x
- Band 2: (1x): 0.8x – 1.2x
- Band 3(synchronous) 1.2x – 3.5 x
- Band 4: 4x to N depending on the machine.

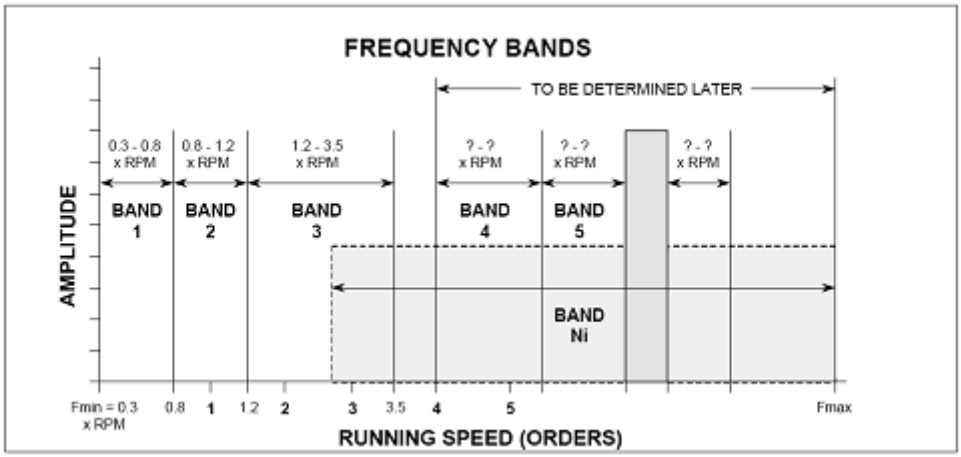

6.2.3 Mask/Envelope Alarms

Envelope alarms (also known as mask alarms, and not to be confused with envelope detection used in bearing analysis), take a different approach. Rather than breaking the spectrum into individual bands, an alarm limit is applied to the entire spectrum.

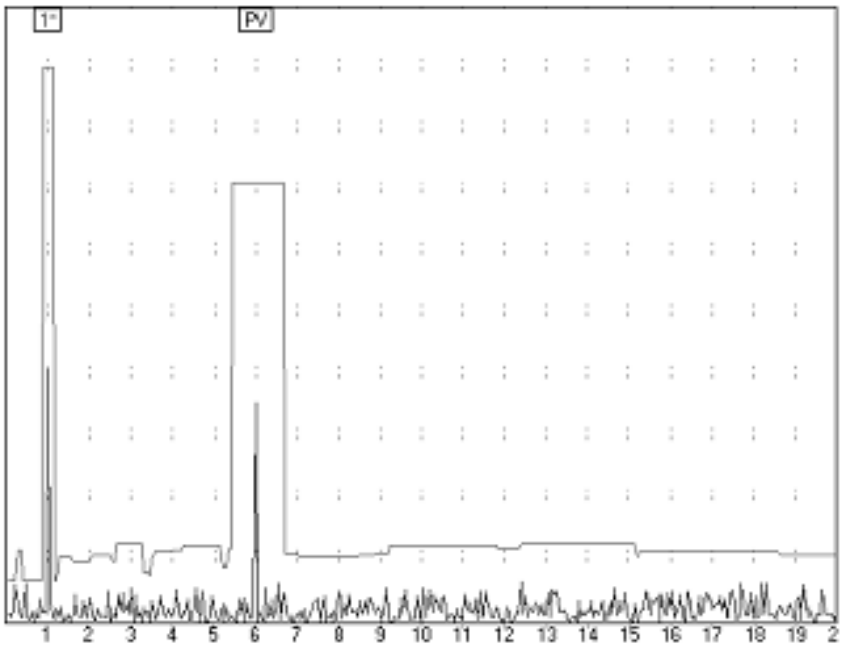

As seen in this example, it is not a single line across the spectrum; it is an envelope that hugs the spectrum at all frequencies.

The benefit to this approach is that every frequency is covered, and it is potentially more sensitive to peaks that can appear at unexpected frequencies. Whereas a single "band" may be used to cover a wide frequency range, from 1X to 10X, for example, an envelope/mask may be computed to have up to 50 individual limits that follow the shape of the spectrum.

Good alarm limits can save a huge amount of time!

6.2.4 Recommendations for setting alarms

Start with published alarms to help get the program started and to give you a very general idea of what is an what is not acceptable.

Once you have collected some data however, switch to relative or calculated alarms. In other words, build baselines around the data you have collected and trend from there. Try to set baselines on healthy machines or note that the machine has some problems now and remember to update the baseline later, after the machine is overhauled.

Regarding the actions you should take based on alarms; in general, if the levels have increased by 50% one should take notice. If the levels increase by 150% then there is a problem that needs to be investigated.

CHAPTER 7 PHASE ANALYSIS

7.1 What is phase?

We need to step back and make sure that we understand phase. Having performed single- or two-plane balancing you will be familiar with phase, but if you predominantly study vibration spectra (and ignore time waveforms), phase may be one of those concepts that you "sort of understand".

Phase is all about timing

Phase is all about the relative timing of related events. Here are a few examples:

When balancing we are interested in the timing between the heavy spot on the rotor and a reference point on the shaft. We need to determine where that heavy spot is located, and the amount of weight required counteracting the rotational forces.

When we look at fault conditions such as unbalance, misalignment, eccentricity, and foundation problems, we are interested in the dynamic forces inside the machine, and as a result, the movement of one point in relation to another point.

7.2 Representing phase(Bubble Diagram)

Thus far we have always discussed phase readings as simple numbers: 0°, 45°, 180°, 360°, etc. We have also seen how we can represent the amplitude and phase in a vector plot. In many cases we are not concerned about the absolute phase number, we are interested in relative phase – how the phase at one point compares to the phase at another. In a moment we will learn more about the applications of phase; however no matter how we use it, we have the option of the numerical value itself, or a visual representation.

In this illustration you can see how convenient it is to represent the phase angle visually. By drawing a circle and a tail at the desired angle, it is easy to quickly determine the angle, and the relative movement, with a quick glance.

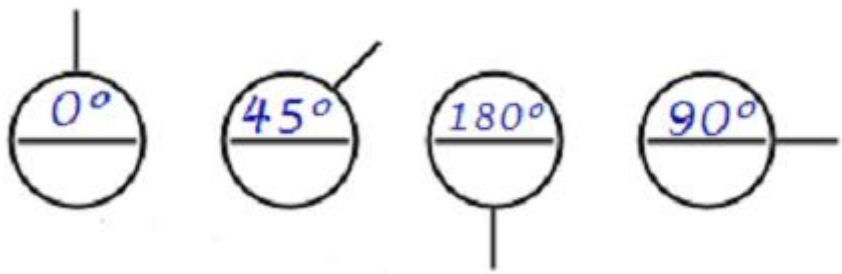

You don't even need to write down the phase angle - you can just draw the tails; either inside or outside the circle. You can easily see that these two readings are 180° out of phase.

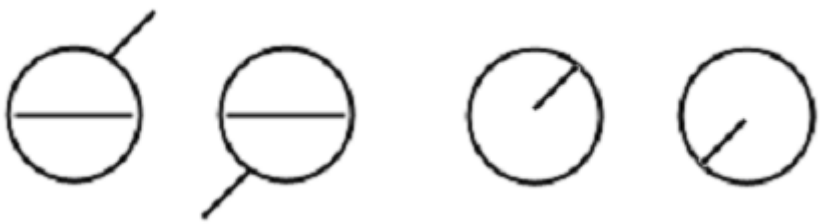

This data can be used in a number of ways, but one common method is called the **bubble diagram** (developed by Ralph T. Buscarello). You can take readings around the machine and enter them into the diagram, adding the tails according to the angle. We will discuss the use of this diagram in greater detail in the phase analysis section.

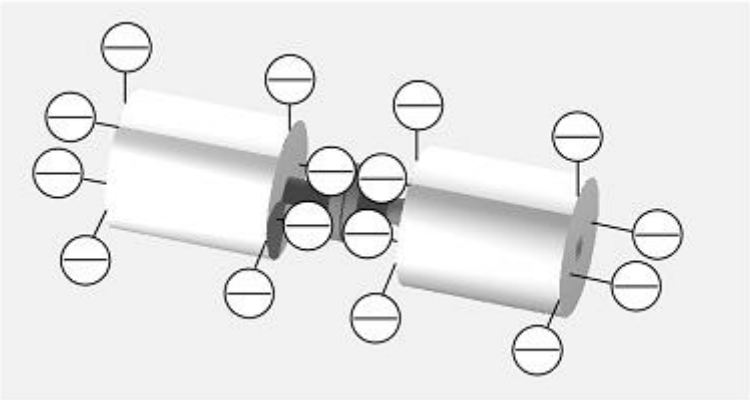

Or for just a single component:

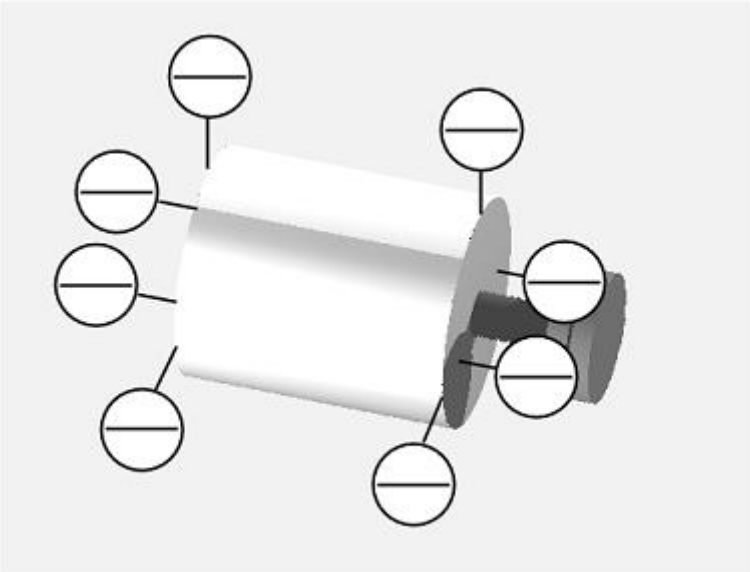

You can then visualize how different points on the machine are moving relative to one another.

7.3 Measuring phase

7.3.1 Using a tachometer

There are a number of ways to obtain a once-per-revolution tachometer signal. The most common involves the use of reflective tape and an optical photo-tach.

There are a number of products available that can use reflected light, including laser light, to generate the tach signals. Many will work without reflective tape, as long as there is an area of high contrast – for example, a paint spot.

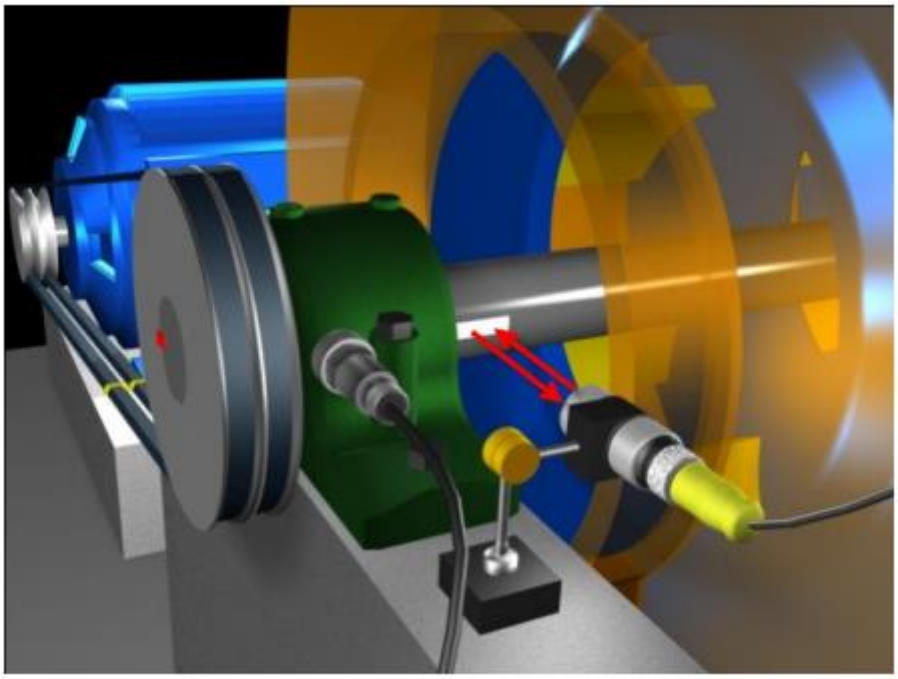

The photocell shines a light (visible or laser) on to the shaft. Due to the surface texture and color, the light does not reflect. When the tape passes underneath, the light reflects. The tachometer generates a TTL signal that is fed into the data collector.

7.3.2 Two channel phase

If we connected one accelerometer to one channel of a two channel data collector, and we connect another sensor to the second channel, the data collector can sample them simultaneously (this is essential) and compare the phase spectra. We would place one sensor at a reference location, and the second sensor at the point of interest. We can also move that sensor around to see how the phase angle changes (while leaving the reference sensor in the same location the whole time).

7.4 Applications of phase analysis

There are a number of ways that you can put phase data to use. There are basically three main vibration applications: balancing, structural resonance analysis, and fault diagnosis. We will discuss balancing and resonance analysis separately. For now we will focus on fault diagnosis.

7.4.1 Machine fault diagnosis

Phase can be used to diagnose fault conditions. There are a number of fault conditions that develop similar patterns, making it difficult to accurately diagnose a fault. While spectra and time waveforms collected in multiple axes can help you to accurately diagnose faults, if you understand the underlying forces involved, phase analysis can provide conclusive evidence as to the exact nature of the fault: unbalance, misalignment, bent shaft, eccentricity, foundation flexibility, cocked bearing, and even looseness.

7.4.1.1 Diagnosing unbalance

7.4.1.1.1 Static Balance

The simplest type of imbalance is equivalent to a heavy spot at a single point in the rotor. This is called a static imbalance because it will show up even if the rotor is not turning - if placed in frictionless bearings the rotor will turn so the heavy spot is at the lowest position.

Static imbalance results in running speed (1X) rotational forces on both bearings of the rotor, and the forces on both bearings are always in the same direction. The vibration signals from them are "in phase" with each other.

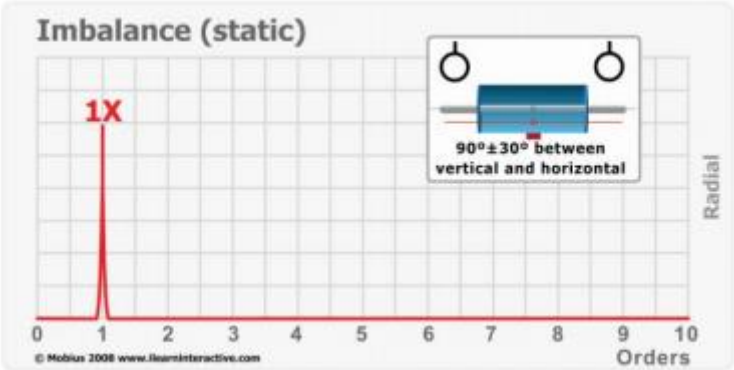

7.4.1.1.2 Couples unbalance

A rotor with couple imbalance may be statically balanced (it may seem to be perfectly balanced if placed in frictionless bearings). But when rotated, it will produce centrifugal forces on the bearings, and they will be of opposite phase.

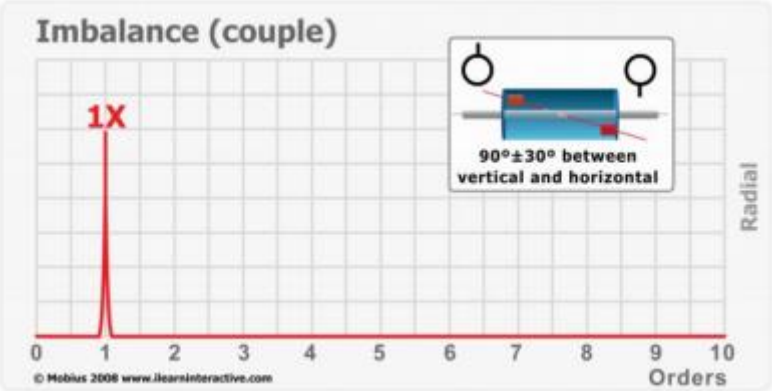

7.4.1.1.3 Dynamic unbalance

In reality the amount of unbalance will not be evenly distributed along the rotor (unless it is a very narrow rotor or axial fan, in which case it will approximate static unbalance). We are likely to have a combination of static and couple unbalance. The combination is called dynamic unbalance.

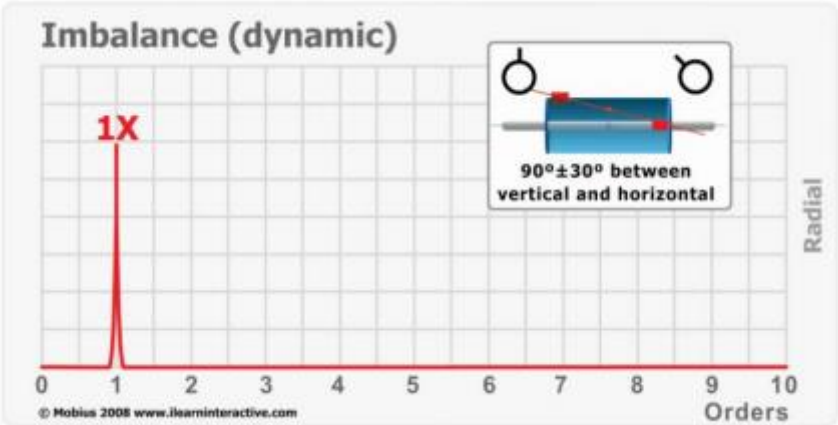

7.4.1.1.4 Vertical machine unbalance

Vertical machines, such as vertical pumps, are usually cantilevered from their foundation, and they usually show maximum 1X levels at the free end of the motor regardless of which component is actually out of balance.

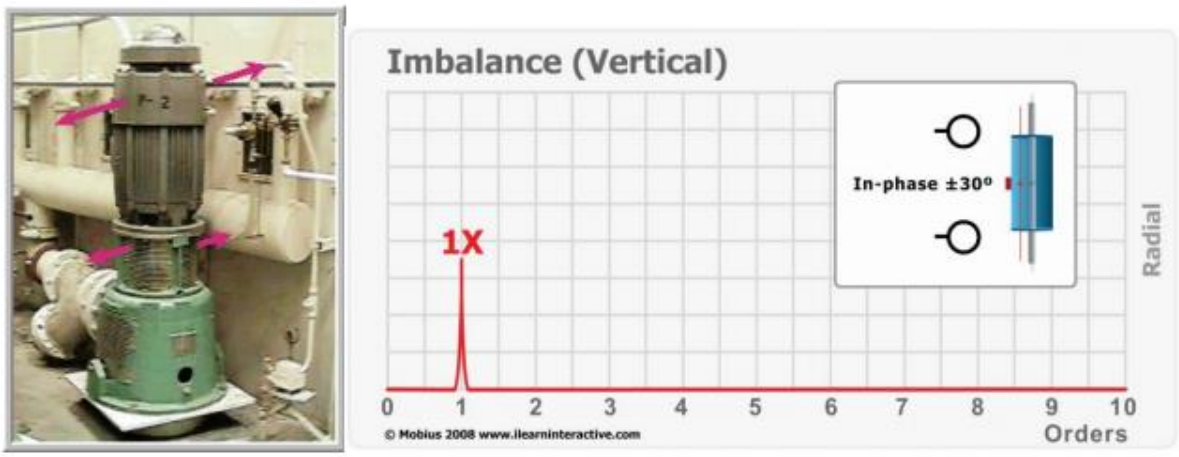

The spectrum will again show a strong 1X peak when measured in the radial direction (Horizontal or tangential), and phase readings collected along the machine should be basically in-phase. Because of the circular motion that results from unbalance, the phase readings taken 90° around from the reference measurements should be 90° greater or lower; depending upon the direction of rotation.

7.4.1.1.5 Unbalance in overhung machines

The dynamics of an overhung machine are quite different; therefore our study of relative vibration levels and phase readings is quite different. Overhung pumps and fans are common in industry so you must examine the machine closely to ensure that you know whether a component is in fact overhung or supported on both sides by bearings.

In an overhung or cantilevered machine, you will again see a high 1X vibration level, however this time it will be observed in the axial direction as well as in vertical and horizontal. Measurements should be taken from the bearing closest to the overhung impeller or fan blades.

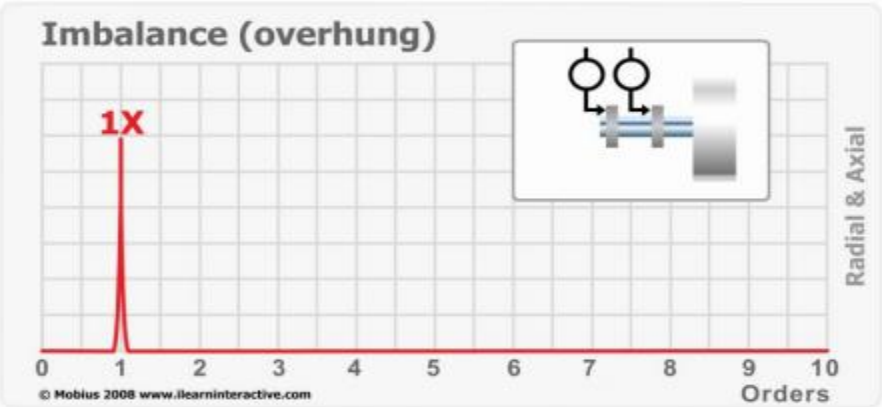

We see the high 1X in axial because the imbalance creates a bending moment on the shaft, causing the bearing housing to move axially. The readings will be in-phase in the axial direction.

7.4.1.2 Misalignment

So many people have simple rules regarding misalignment. "If the 1X peak is high in axial then it may be misalignment. If the 2X is high in radial then it may be misalignment." Some people acknowledge that a 3X or 4X peak may also be present in the radial spectrum, however if 1X is high in radial the assumption is that the machine is out-of-balance. That can be a dangerous assumption to make. Misalignment also generates 1X in the radial direction, and phase should be used to distinguish between unbalance and misalignment.

If a machine is misaligned, we would not expect to see 90° or 270° degrees between the vertical and horizontal readings taken at the same bearing. Instead they are likely to be closer to 0° or 180°.

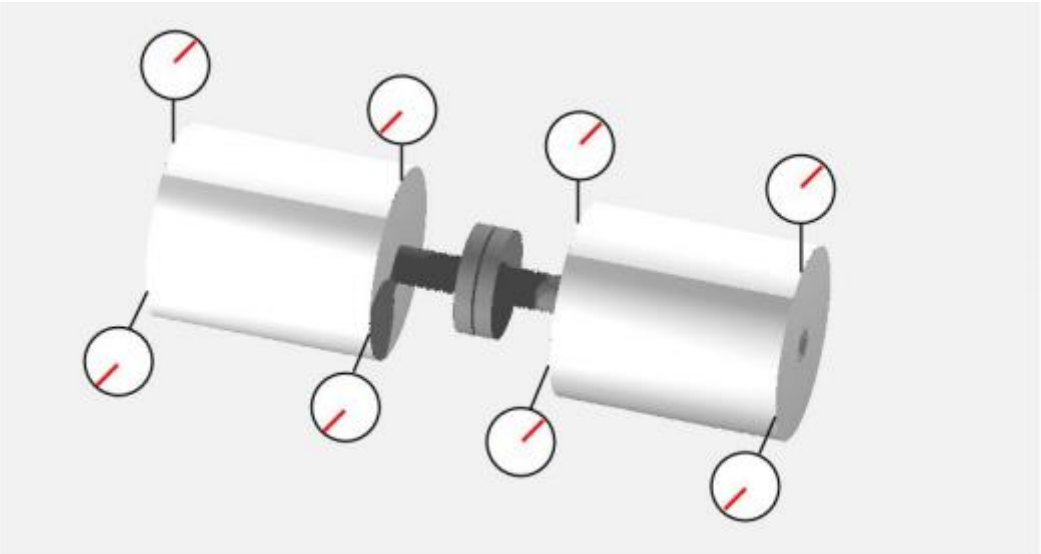

When there is strong angular misalignment you would expect the phase reading to be 180 out-of-phase across the coupling.

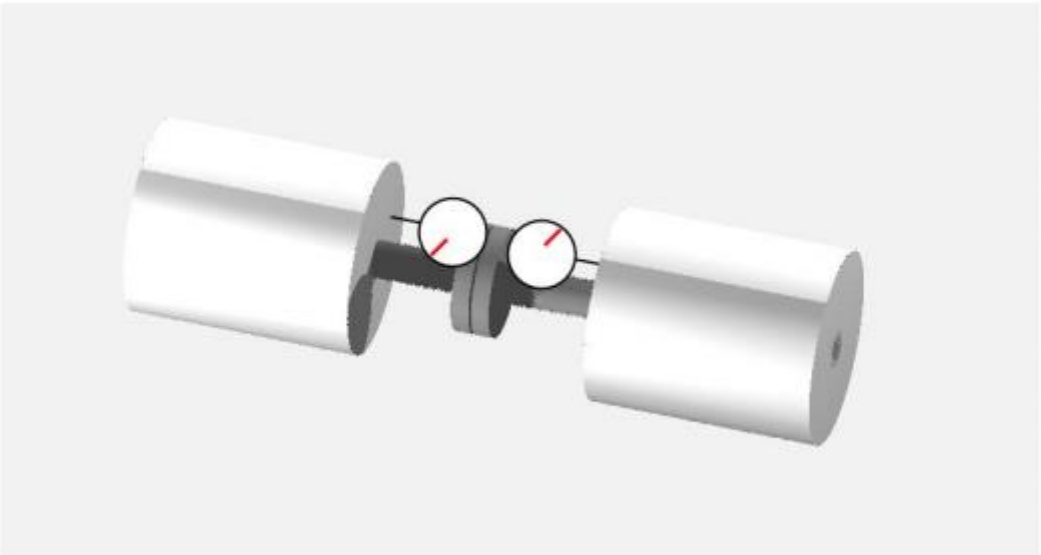

7.4.1.3 Eccentricity

Eccentricity occurs when the center of rotation is offset from the geometric centerline of a sheave (pulley), gear, bearing, or rotor.

Eccentric sheaves/gears will generate strong 1X radial components, especially in the direction parallel to the belts. This condition is very common, and mimics imbalance. The phase relationship, however, is quite different, because the motion is quite different.

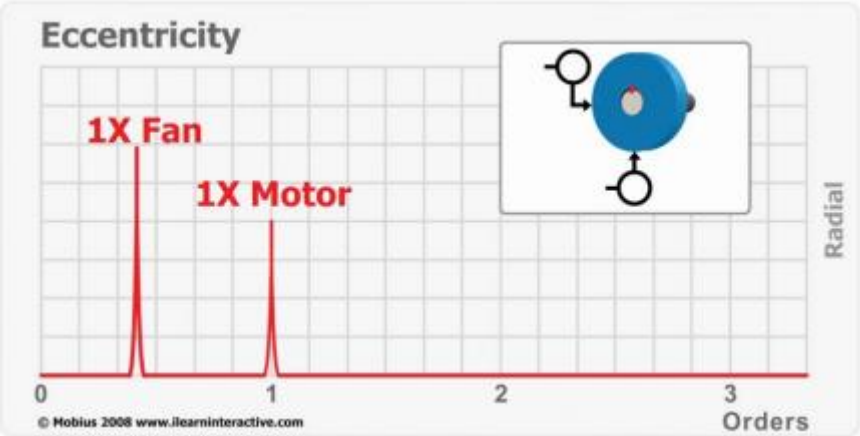

In belt driven machines, there will be a high 1X vibration level on both components (motor and fan for example), however due to the change in speed, these will be at two different frequencies.

7.4.1.4 Bent shaft

A bent shaft predominantly causes high 1X axial vibration. The dominant vibration is normally at 1X if the bend is near the center of the shaft, however you will see 2X vibration if the bend is closer to the coupling. Vertical and horizontal measurements will also often reveal peaks at 1X and 2X, however the key is the axial measurement.

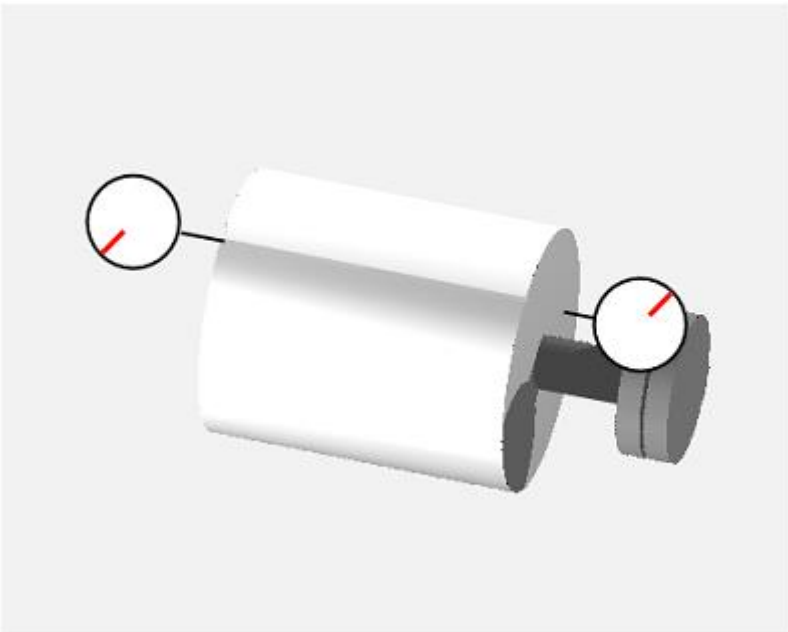

Phase is also a good test used to diagnose a bent shaft. The phase at 1X measured in the axial directions at opposite ends of the component will be 180 degrees out of phase.

7.4.1.5 Cocked bearing

A cocked bearing, which is a form of misalignment, will generate considerable axial vibration. Peaks will often be seen at 1X and 2X in the axial direction, and even 3X and other harmonics can be seen. Given that there is such a strong axial vibration, it too can be confused with misalignment, and with imbalance in an overhung pump or fan. The presence of peaks at 2X (and 3X) in the axial direction would indicate a cocked bearing condition, distinguishing itself from imbalance.

There are actually two possible forms of cocked bearing. If the outer race of the bearing is cocked, the axial phase readings will indicate a 180° difference from one side of the shaft to the other. However, it all depends how it is cocked. The 180° difference may be seen from the left side to the right or it may be seen from the top to the bottom – but not both.

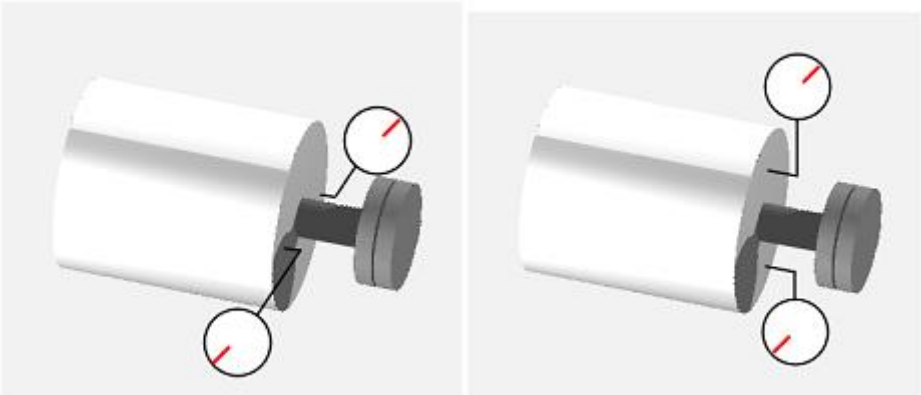

If the inner race is cocked on the shaft, then the bearing will appear to "wobble" as it rotates, generating a rotating 180° phase difference. There will be 90° difference as you move from top to right to bottom, to left (or 12:00 to 3:00 to 6:00 to 9:00).

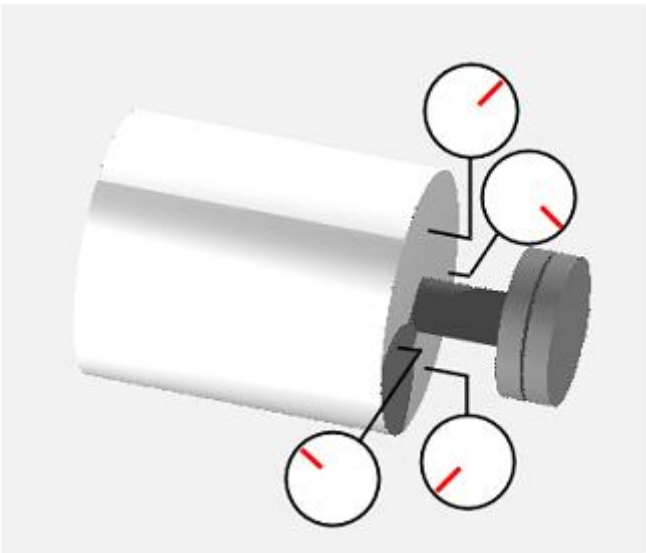

7.4.1.6 Looseness

First, if the vibration levels are high enough, the machine may rock back and forth. Phase readings taken in the horizontal direction could be in phase, but unlike unbalance, there will not be a 90º phase difference between vertical and horizontal.
If there is a crack in the foundation or a loose hold-down bolt, you can monitor the phase while you move the accelerometer from point to point. When the accelerometer moves across the

crack or loose boundary, the phase angle will change by 180º.

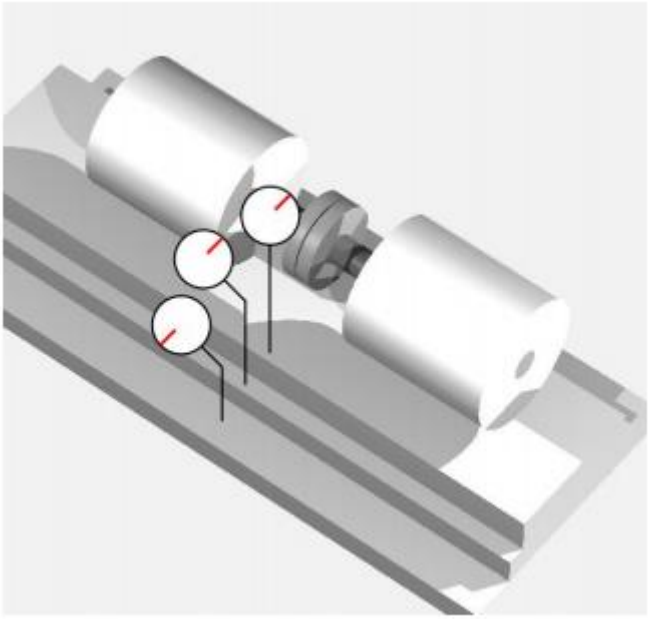

Conclusion:
I hope you now have renewed interest in phase analysis. Phase can be used to help you to positively diagnose a wide range of fault conditions, and to visualize resonance conditions. If you have a two channel data collector, phase readings are not difficult to collect and should be performed frequently.